FREESTYLE SKI WORLD CUP

FREESKI & SNOWBOARD WORLD CUP

Marketing Guide 2019/20

Halfpipe

Slopestyle

Big Air

Aerials

Moguls

Table of contents

1. Contacts

2. General Marketing Information

2.1 FIS Freestyle Ski/Freeski/Snowboard World Cup Sponsors

2.2 Responsibilities FIS

2.3 Responsibilities National Ski Association (NSA) / Local Organizing Committee (LOC)

3. Freestyle Ski World Cup Venue

3.1 Start and Finish Area

3.1.1 Start Structure Design Overview

3.1.2 Finish Structure Design Overview

3.1.3 Exit Gate

3.2 Banners on Course, Functional Building and FinishArea

3.3 Award Ceremony

3.4 Presentation Backdrop

3.5 Video Wall

3.6 Inflatables

3.7 Beach Flags

4. Bib Numbers

4.1 General Information

4.2 Competition Bib

4.3 Leader Bib

5. TV, Web and Print Material

5.1 Use of FIS Freestyle Ski World Cup Logo

5.1.1 General guidelines for use of Logo

5.1.2 Official Freestyle Ski World Cup Titles

5.2 Use of FIS Freeski World Cup Logo

5.2.1 General guidelines for use of Logo

5.2.2 Official Freeski World Cup Titles

5.3 Use of FIS Snowboard World Cup Logo

5.3.1 General guidelines for use of Logo

5.3.2 Official Snowboard World Cup Titles

5.4 FIS Freestyle Ski World Cup Promotional Material

5.5 TV and Web

6. Hospitality

6.1 Promotional and Hospitality Activities

1. Contacts

FIS International Ski Federation
Blochstrasse 2
CH- 3653 Oberhofen
Switzerland
Tel.: + 41 33 244 61 61
Fax: + 41 33 244 61 71

Joseph Fitzgerald
Freestyle Skiing Coordinator
Tel.: +41 33 244 6161
@: fitzgerald@fisski.com

Roberto Moresi
Contest Director Park & Pipe
Tel.: +39 347 441 86 34
@: moresi@fisski.com

Kathrin Hostettler
Freestyle Skiing & Snowboard Assistant
Tel.: + 41 33 244 6165
@: hostettler@fisski.com

Jürg Capol
Marketing Director
Tel.: + 41 33 244 61 61
@: capol@fisski.com

Stefan Huber
Event Director
Tel.: + 41 33 244 61 61
@: huber@fisski.com

Sibylle Bührer
Marketing Assistant
Tel.: +41 33 244 61 66
@: buehrer@fisski.com

FIS Marketing AG
Wolleraustrasse 15n
CH-8807 Freienbach
Switzerland
Tel.: + 41 44 224 69 60
Fax: + 41 44 224 6909

Andi Marugg
Director Alpine / Freestyle
Tel: +41 78 692 88 11
@: marugg@fismarketingag.com

Daniel Fanger
Project Manager Alpine / Freestyle
Tel: +41 79 399 97 33
@: fanger@fismarketingag.com

2. General Marketing Information

2.1 Freestyle Ski/Freeski/Snowboard World Cup Sponsors

FIS in agreement with the National Ski Associations (NSA) stages an annual World Cup Series in Freestyle Ski/Freeski/Snowboard .
The events of the Freestyle Ski/Freeski/Snowboard World Cup are:

- Mogul / Dual Mogul
- Aerials

- Ski Halfpipe
- Ski Slopestyle
- Ski Big Air
- Snowboard Halfpipe
- Snowboard Slopestyle
- Snowboard Big Air

FIS in agreement with the NSA`s , have defined marketing guidelines for the World Cup. This document outlines the general marketing principles.

Branch Exclusivity of FIS Sponsors
The FIS Freestyle Ski/Freeski/Snowboard World Cup Sponsors have branch exclusivity within their product category.
The NSA assures that no competing companies are present with their branding in any commercial or public area of the event.

Title Sponsor
The position of the Title Sponsor is open in the following Events:

- Moguls / Dual Moguls
- Aerials
- Ski/Snowboard Halfpipe
- Ski/Snowboard Slopestyle
- Ski/Snowboard Big Air

FIS Freestyle Ski/Freeski/Snowboard World Cup sponsor rights
The FIS Sponsors have the right to promote their products and services on site during the events at no extra cost.

2.2 Responsibilities FIS	To define the advertising rules and guidelines for marketing and implementation of sponsor rights. FIS has an overview of all marketing related issues whereas at the event the Contest Director is the main contact person.
2.3 Responsibilities National Ski Association (NSA) / Local Organizing Committee (LOC)	The NSA / LOC has to provide the necessary preparation of the sponsor area inside the TV-range in prior consultation with the FIS Contest Director. In addition the NSA / LOC is responsible for a clean appearance of the sponsors outside of the TV-range.

3. FIS Freestyle Ski/Freeski/Snowboard World Cup Venue

3.1 Start and Finish Area

The NSA must produce and provide all start and finish installations including the exit gate. The NSA is responsible to organize and set up the start and finish installations in collaboration with the Contest Director.

If there is a need for modification on the various start- and finish installations this has to be discussed with FIS.

The Title Sponsor has the exclusive right for the design of the frame and backdrop of all start- and finish installations including the exit gate.

3.1.1 Start Structure Design Overview

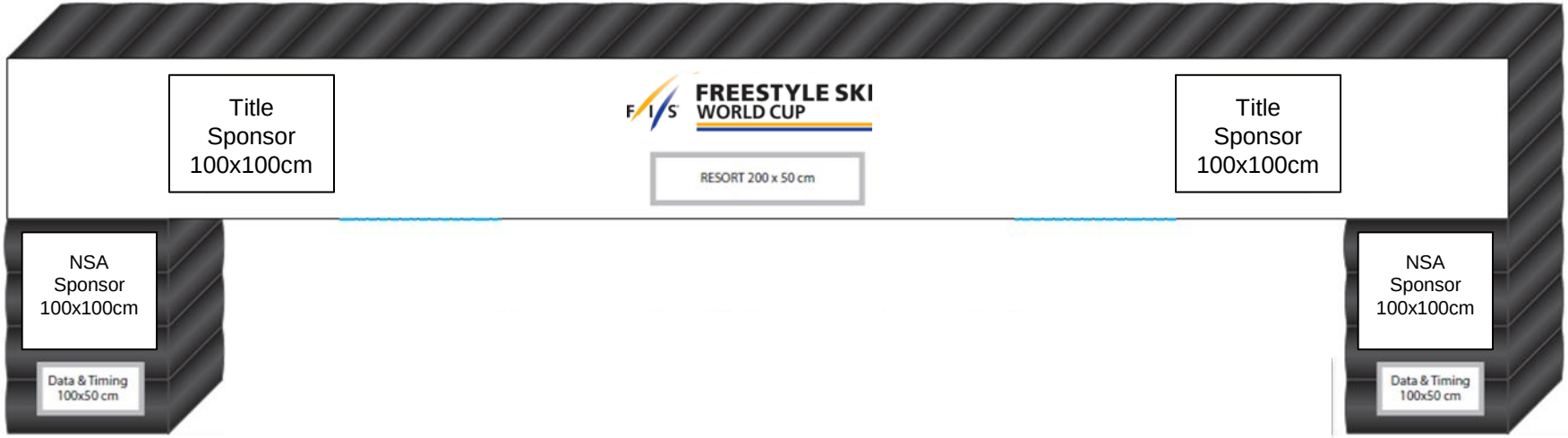

Example for Start installation
Halfpipe, Moguls,Slopestyle

The advertising space is allocated as follows:

FIS Title Sponsor:	2x (1m x 1m)
NSA Sponsor:	2x (1m x 1m)
FIS Data and Timing Partner:	2x (1m x 0,5m)
Resort Logo:	1x (2m x 0,5m)
Official FIS WC Logo:	1x (2m x 0,5m)

Exception for Start installation Aerials:
In view of the specific nature of this discipline, it is agreed that a single line of boards/banners for the Event Sponsor and FIS Title Sponsor may be placed behind the starting points. The height may not exceed 400 cm.

Technical Information:
Size: 14m wide x 3.5m high x 1.5m deep. Width inside: 11m
The sizes may vary at each event.

Requirements NSA:
NSAis responsible for building up the start installation with the following specifications
- flat space of minimum 15m wide x 5m deep for start installation set up

3.1.1 Start Structure Design Overview

Example for Start installation
Dual Moguls

The advertising space is allocated as follows:

FIS Title Sponsor:	2x (1m x 1m)
NSA Sponsor:	3x (1m x 1m)
FIS Data and Timing Partner:	2x (1m x 0,5m)
Resort Logo:	1x (2m x 0,5m)
Official FIS WC Logo:	1x (2m x 0,5m)

Technical Information:
Technical Information:
Size: 14m wide x 3.5m high x 1.5m deep. Width inside: 11m
The sizes may vary at each event.

Requirements NSA:
NSA is responsible for building up the start installation with the following specifications
- flat space of minimum 15m wide x 5m deep for start installation set up

3.1.1 Start Structure Design Overview

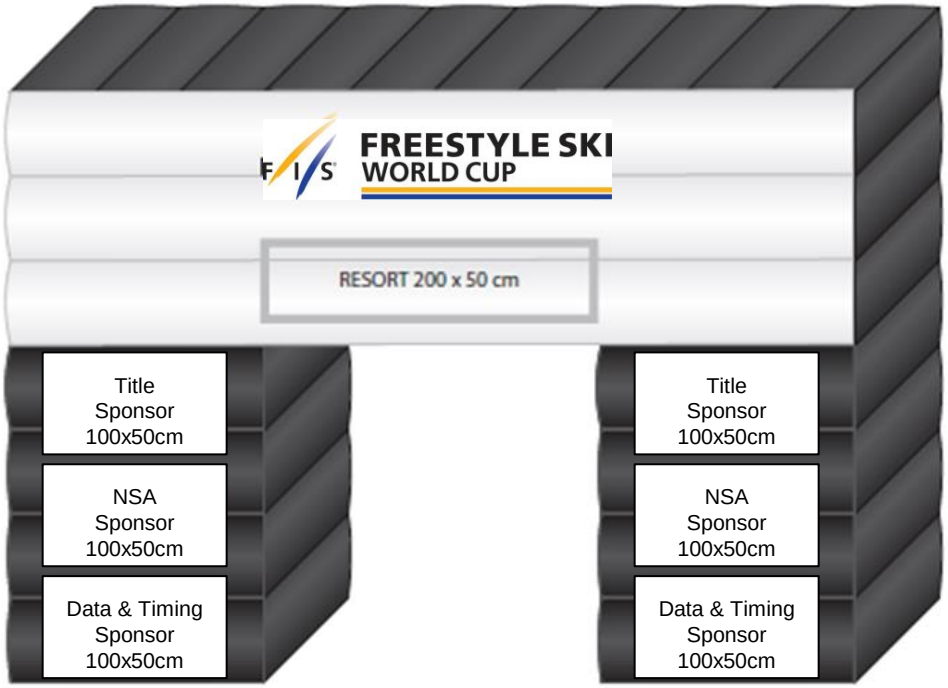

Example for Start installation
Big Air, Slopestyle, Halfpipe

The advertising space is allocated as follows:

FIS Title Sponsor:	2x (1m x 0,5m)
NSA Sponsor:	2x (1m x 0,5m)
FIS Data and Timing Partner:	2x (1m x 0,5m)
Resort Logo:	1x (2m x 0,5m)
Official FIS WC Logo:	1x (2m x 0,5m)

Technical Information:
Size: 5m wide x 3.5m high x 1.5m deep. Width inside: 2m

Requirements NSA:
NSA is responsible for building up the start installation with the following specifications

- flat space of minimum 15m wide x 5m deep for start installation set up

3.1.2 Finish Structure Design Overview

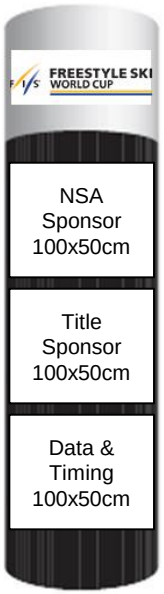

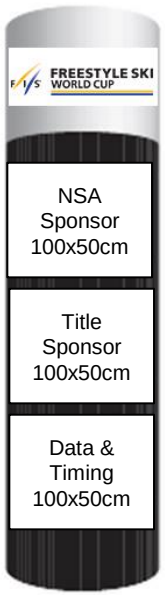

The advertising space is allocated as follows:
Two logos on each column (one in front one on back)

FIS Title Sponsor:	4x (1m x 0,5m)
NSA Sponsor:	4x (1m x 0,5m)
Data and Timing Partner:	2x (1m x 0,5m)
Official FIS WC Logo:	2x (1m x 0,25m)

Technical Information:
Size per column: 3.5m high x 1.5m wide x 1.0m deep

Requirements NSA:
NSA is responsible for building up the finish installation.
Define space between the columns with FIS Contest Director.

Ensure clean finish line area.
Please note that the columns cannot be affixed with ropes due to safety reasons

3.1.3 Exit Gate

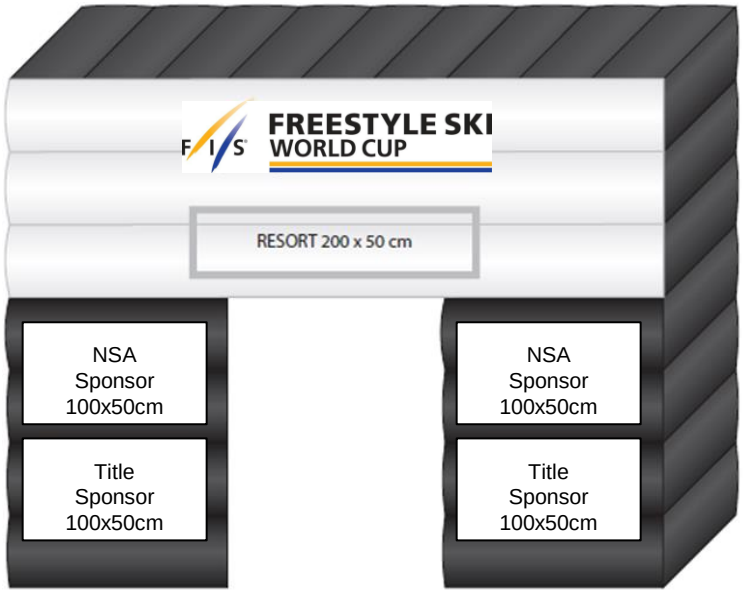

The advertising space is allocated as follows:

FIS Title Sponsor:	2x (1m x 0,5m)
NSA Sponsor:	2x (1m x 0,5m)
Resort Logo:	1x (2m x 0,5m)
Official FIS WC Logo:	1x (2m x 0,5m)

Technical Information:
Size: 5m wide x 3.5m high x 1.5m deep. Width inside: 2m

Requirements NSA:
NSA is responsible for building up the finish installation with the following specifications:

- Flat space of 15m wide x 5m deep in the finish area

Multi electrical socket 220V close to the exit gate position

3.2 Banners

Banners on course and in finish area
The bannering on course and in the finish area (including the platinum circle) is allocated as follows:

- 100% NSA Sponsor

Advertising Banners may not exceed 8 meters in width and 1.5 meter in height

Platinum Circle
. 100% NSA
. Max height 0,25 m

Banners on functional buildings
Advertising on the functional buildings is allocated as follows:

- 100% NSA

3.3 Award Ceremony

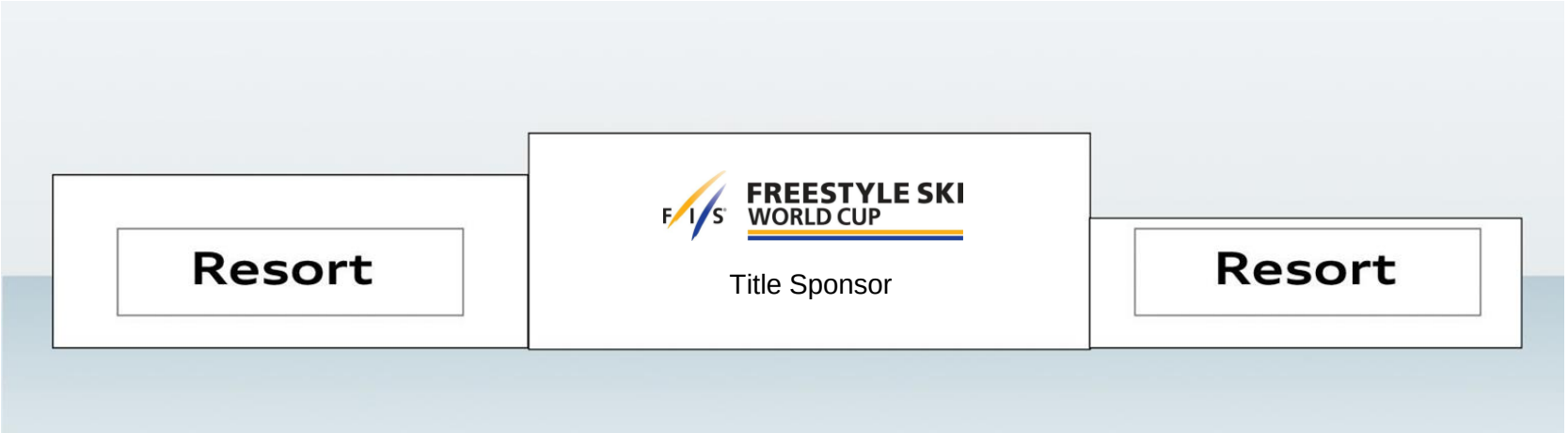

The advertising on the podium is allocated as follows:

1st Position: FIS Title Sponsor:	1x (0,5m x 0,25)
1st Position Official FIS WC logo:	1x (0,5m x 0,25m)
2nd and 3rd Position Resort identification:	2 x(0.5m x 0.25m)

Technical Information:

The podium for the top 3 athletes will be provided and installed by the NSA.

The dimension of the podium should be:
1m deep x 1m (2nd and 3rd place) x 1,5m (1st place)

3.3 Award Ceremony

Award Ceremony Backdrop
The backdrop for the award ceremony will be provided and installed by NSA.

Placement
The placement of the podium and the backdrop shall be determined by the FIS Contest Director in cooperation with the Local Organizing Committee based on the best possible TV exposure.

3.3 Award Ceremony

Ceremony backdrop sponsor identifications:

Title Sponsor	40% 28 x (0.25m x 0.13m)
	to be shared with Data&Timing
NSA Sponsor	40% 28 x (0.25m x 0.13m)
Resort	20% 14 x (0.25m x 0.13m) and 1x (2m x 0.5)

Technical Information:

Size: 4m wide x 3.5m high x 1.5m deep

Requirements NSA:

• NSA is responsible to prepare for constructing and building up the award Ceremony backdrop.

• Production of all NSA Logo spaces (NSA & Resort) on installation

Material specifications: magnetic board (ca. 1mm) matt finished print to adhere on metal sheet

3.4 Presentation / Interview Backdrop

Presentation / Interview backdrop sponsor identifications:

Title Sponsor	40% 12 x (0.25m x 0.13m)
	to be shared with Data&Timing
NSA Sponsor	40% 12 x (0.25m x 0.13m)
Resort	20% 6 x (0.25m x 0.13m) and 1 x (1,20m x 0.3m)

Technical Information:

Size: 2m wide x 2.4m high; deep: approx.: 0.75m

Material specifications: magnetic board (ca. 1mm) matt finished print to adhere on metal sheet

Requirements NSA:

Availability of an appropriate position in the finish area in consultation with the Contest Director

Athletes must have a clear view on the video wall

Electrical socket 220V close to the presentation wall

3.5 Video Wall

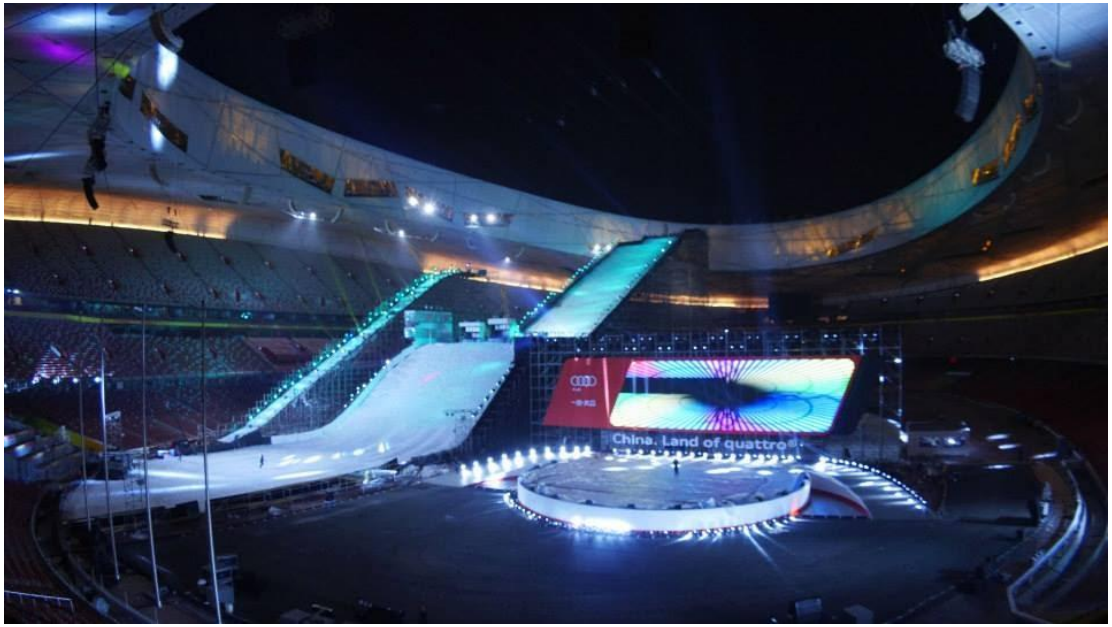

Advertising Spot on big screen

The Title Sponsor and the Data and Timing Partner each shall have the possibility to show a 30 second advertisement spot on the big screen at the FIS Freestyle Ski/Freeski/Snowboard World Cup event. The advertisement spots of the sponsor shall be shown several times before, in between and after the races (aired at least 5 times per event day with at most 2 hours between airings).

Please communicate specifics about the necessary video spot format to FIS **20 days** prior to the event.

The video wall must be organized and provided by the Local Organizing Committee.

Advertising possibilities on the video wall are allocated as follows:

- 100% NSA

3.6 Inflatables

Inflatables

Inflatables are allowed within the TV area and the surrounding venue areas.

Advertising possibilities are allocated as follows:

100% NSA

The number of inflatables are restricted to a maximum of 6 per competition in Slopestyle, Halfpipe, Moguls, Aerial and Big Air events.

Technical Information:

PVC-inflatable

Size: max. height 6m and max. width 5m

Requirements NSA:

Electrical socket 220V, in position TBD together with the Race Director.

3.7 Beach Flags

Beach Flags

Beach flags are allowed within the TV area and the surrounding venue areas.

Advertising possibilities are allocated as follows:

25%	Title Sponsor
75%	NSA

Requirements NSA:

Although there is not a limitation in the amount of beach flags this should not lead to an overload both on the course and in the finish area. The setup of beach flags should follow high-quality and premium criteria.

4.1 General information

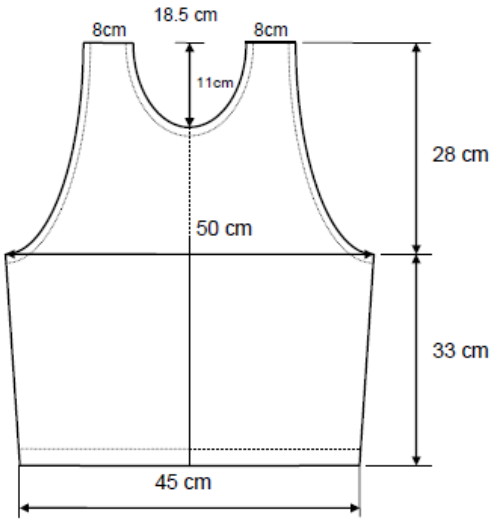

Aerials Men

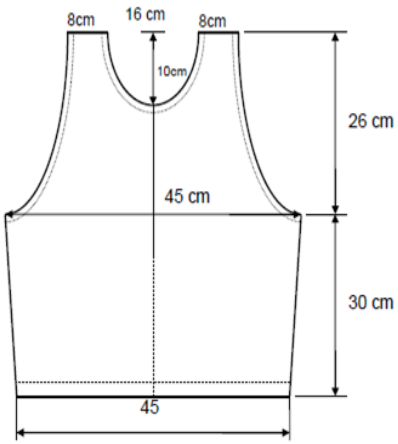

Aerials Women

4.1 General Information

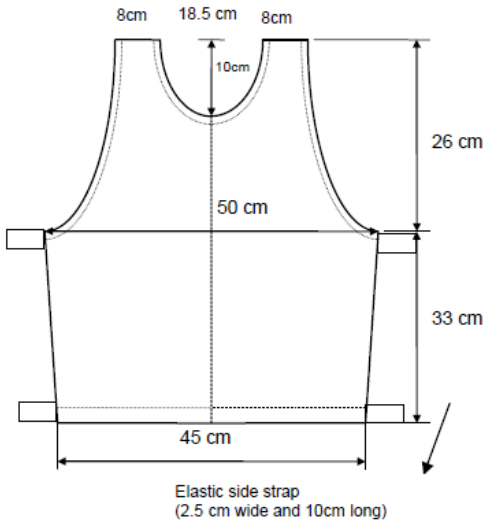

Moguls, Halfpipe, Slopestyle, Big Air - Men

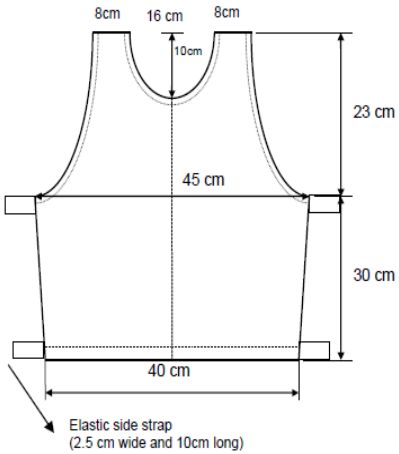

Moguls, Halfpipe, Slopestyle, Big Air - Woman

4.2 Competition Bib

Halfpipe, Slopestyle, Big Air and Moguls bib

Aerials bib

The advertising on the starting bib is allocated as follows:

- Official FIS Freestyle Ski/Freeski/Snowboard World Cup logo on the upper left side (when wearing the bib) max. size of logo: 6cm x 6cm
- Official FIS logo on the upper right side (when wearing the bib) max size of logo: 6cm x 6cm
- Title Sponsor upper part of bib: maximum height of the logo is 20 cm
- NSA Sponsor: below the resort on the bottom of bib. Maximum Height 5cm
- Resort: the maximum height of the resort logo is 10cm
- Height of number: 12cm

Technical Information:

The bibs are produced and provided by the NSA
The costs are to be borne by the NSA

The NSA is responsible for producing and providing the Starting bib.

The Starting bib must be conform to the guidelines.

Please send the layout of the competition bib to FIS for approval at least 10 days before production.

Kathrin Hostettler
@: hostettler@fisski.com
Tel.: 0041 33 244 61 61

4.3 Leader bib

Leader bib

The leader of the overall FIS Freestyle Ski/Freeski/Snowboard World Cup will wear a yellow leader bib:

This bib will be produced by the NSA.

The advertising on the leader bib is allocated as follows:

- Official FIS Freestyle Ski/Freeski/Snowboard World Cup logo on the upper left side (when bib is worn)
  max. size of logo: 6cm x 6cm
- Official FIS logo on the upper right side (when bib is worn)
  max. size of logo: 6cm x 6cm
- NSA Sponsor: maximum height 20 cm
- Title Sponsor logo in the middle of the bib
  the maximum height of the logo is 12cm
- Resort the maximum height of the logo is 10cm

If there is no Title Sponsor the FIS logo is placed in that position

Technical Information:

The layout of the bib must be in accordance with the FIS Advertising Rules.

The size of the bibs must be in accordance with the guidelines set forth in the FIS Specifications for Equipment rules.

The bibs are produced and provided by the NSA
The costs are to be borne by the NSA

4.3 Leader Bib

Past season Winner bib

A special FIS Freestyle Ski/Freeski/Snowboard World Cup past season winner blue bib will be prepared and will be worn by the respective Past season winner, as entered into each event.

If the Past Season Winner and present Leader of the FIS Freestyle Ski World Cup are the same person then the Yellow bib will be used for the competition.

The bibs are produced and provided by the NSA
The costs are to be borne by the NSA

The advertising on the past Season Winner bib is allocated as follows:

- Official FIS Freestyle Ski/Freeski/Snowboard World Cup logo on the upper left side (when bib is worn) max. size of logo: 6cm x 6cm
- Official FIS logo on the upper right side (when bib is worn), max. size of logo: 6cm x 6cm
- NSA Sponsor: maximum height 20 cm
- Presenting Sponsor logo in the middle of the bib, the maximum height of the logo is 12cm
- Resort the maximum height of the logo is 10cm

If there is no Presenting Sponsor the FIS logo is placed in that position

5. TV, Web and Print Material

5.1 Use of the FIS Freestyle Skiing World Cup Logo

a)

b)

The use of the official FIS Freestyle Skiing World Cup logo is subject to a set of guidelines as outlined on the next page. This logo is part of the corporate identity of the International Ski Federation (FIS). The FIS Freestyle Ski World Cup logo is a registered trademarks of FIS.

The NSA /LOC is not allowed to bring the official World Cup logo in connection with any other sponsor other than the FIS World Cup Title Sponsor.

5.1.1 General Guidelines for the use of Logo

Size
As a rule of thumb the official FIS Freestyle Ski World Cup logo must cover 5% of the overall surface of any promotional tool it is placed on. In any case the size of the logo may not be smaller than 30 mm (width for the portrait) version of the logo.

Logo context , frame, position, dimension
The integrity of the official logo must be secured through appropriate context. The official logo may not be overshadowed by other word marks or logos. Similar but unrelated marks may not be used in the same context to avoid establishing an inappropriate relationship.

In general use, the logo is without a frame and should be positioned horizontally. As a rule, the logo is two-dimensional. The colored logo should be used on a white background. In case the logo needs to be positioned on a colored background, the solid white version must be used.

5.1.2 Official FIS Freestyle World Cup titles

English:	FIS Freestyle Ski World Cup
German:	FIS Freestyle Ski Weltcup

5.2 Use of the FIS Freeski World Cup Logo

a)

The use of the official FIS Freeski World Cup logo is subject to a set of guidelines as outlined on the next page. This logo is part of the corporate identity of the International Ski Federation (FIS). The FIS Freeski World Cup logo is a registered trademarks of FIS.

The NSA /LOC is not allowed to bring the official World Cup logo in connection with any other sponsor other than the FIS World Cup Title Sponsor.

5.2.1 General Guidelines for the use of Logo

Size
As a rule of thumb the official FIS Freeski World Cup logo must cover 5% of the overall surface of any promotional tool it is placed on. In any case the size of the logo may not be smaller than 30 mm (width for the portrait) version of the logo.

Logo context , frame, position, dimension
The integrity of the official logo must be secured through appropriate context. The official logo may not be overshadowed by other word marks or logos. Similar but unrelated marks may not be used in the same context to avoid establishing an inappropriate relationship.

In general use, the logo is without a frame and should be positioned horizontally. As a rule, the logo is two-dimensional. The colored logo should be used on a white background. In case the logo needs to be positioned on a colored background, the solid white version must be used.

5.2.2 Official FIS Freeski World Cup titles

English:	FIS Freeski World Cup
German:	FIS Freeski Weltcup

5.3 Use of the FIS Snowboard World Cup Logo

a)

b)

The use of the official FIS Snowboard World Cup logo is subject to a set of guidelines as outlined on the next page. This logo is part of the corporate identity of the International Ski Federation (FIS). The FIS Snowboard World Cup logo is a registered trademarks of FIS.

The NSA /LOC is not allowed to bring the official World Cup logo in connection with any other sponsor other than the FIS World Cup Title Sponsor.

5.3.1 General Guidelines for the use of Logo

Size
As a rule of thumb the official FIS Snowboard World Cup logo must cover 5% of the overall surface of any promotional tool it is placed on. In any case the size of the logo may not be smaller than 30 mm (width for the portrait) version of the logo.

Logo context , frame, position, dimension
The integrity of the official logo must be secured through appropriate context. The official logo may not be overshadowed by other word marks or logos. Similar but unrelated marks may not be used in the same context to avoid establishing an inappropriate relationship.

In general use, the logo is without a frame and should be positioned horizontally. As a rule, the logo is two-dimensional. The colored logo should be used on a white background. In case the logo needs to be positioned on a colored background, the solid white version must be used.

5.3.2 Official FIS Snowboard World Cup titles

English: FIS Snowboard World Cup

German: FIS Snowboard Weltcup

5.4 FIS Freestyle Ski/Freeski & Snowboard World Cup Promotional Material

Event advertising material and roll-ups

The following must be included on all event advertising /promotional material:

- Official FIS Freestyle Ski/Freeski/Snowboard World Cup logo
- Official World Cup title “FIS Freestyle Ski/Freeski/Snowboard World Cup”

Event related promotional materials include, but are not limited to:

- Posters
- Programs
- Invitations
- Accreditation
- Start and result lists

Approval

All event related print materials must be sent to FIS a minimum of 10 days before production for approval. Please send to:

Kathrin Hostettler
hostettler@fisski.com

5.5 TV and web

TV Graphics
The FIS Title Sponsor and Data and Timing Partner is entitled to have its logo included in the FIS Freestyle Ski/Freeski/Snowboard World Cup TV Graphics.

Local Organizer's Website
All FIS Freestyle Ski/Freeski/Snowboard World Cup Organizers are obliged to include the FIS Freestyle Ski/Freeski/Snowboard World Cup logo and official WC title "FIS Freestyle Ski/Freeski/Snowboard World Cup" on their website.

FIS Freestyle Ski Website
The FIS Freestyle Ski/Freeski/Snowboard website gives each Organizing Committee the opportunity to promote their World Cup event and activities. Please see:

http://www.fis-ski.com/

If you would like to promote your event or have information to contribute to the website please contact:

Chad Buchholz buchholz@fisski.com
Mateusz Kielpinski kielpinski@fisski.com

6. Hospitality

6.1 Promotional and Hospitality Activities

The Title Sponsor has the opportunity for promotional and hospitality activities at all events. Details are to be communicated by FIS.