THE INTERNATIONAL SKI COMPETITION RULES (ICR)

BOOK III
SKI JUMPING

APPROVED BY THE 51ST INTERNATIONAL SKI CONGRESS, COSTA NAVARINO (GRE)

INCL. MARKED-UPS AND PRECISIONS 2019

EDITION JULY 2019

FÉDÉRATION INTERNATIONALE DE SKI
INTERNATIONAL SKI FEDERATION
INTERNATIONALER SKI VERBAND

INTERNATIONAL SKI FEDERATION
FEDERATION INTERNATIONALE DE SKI
INTERNATIONALER SKI VERBAND

Blochstrasse 2; CH- 3653 Oberhofen / Thunersee; Switzerland

Telephone: +41 (33) 244 61 61
Fax: +41 (33) 244 61 71
Website: www.fis-ski.com

All rights reserved.
© Copyright: International Ski Federation FIS, Oberhofen, Switzerland, 2019.

Printed in Switzerland

Oberhofen, ~~June 2018~~August 2019

Table of Contents

1st Section

200 Joint Regulations for all Competitions 3
201 Classification and Types of Competitions 3
202 FIS Calendar 5
203 Licence to participate in FIS Races (FIS Licence) 7
204 Qualification of Competitors 8
205 Competitors Obligations and Rights 9
206 Advertising and Sponsorship 10
207 Competition Equipment and Commercial Markings 12
208 Exploitation of Electronic Media Rights 13
209 Film Rights 17

210 Organisation of Competition 17
211 The Organisation 17
212 Insurance 18
213 Programme 18
214 Announcements 19
215 Entries 19
216 Team Captains' Meetings 19
217 Draw 20
218 Publication of Results 20
219 Prizes 22

220 Team Officials, Coaches, Service Personnel, Suppliers and Firms' Representatives 22
221 Medical Services, Examinations and Doping 23
222 Competition Equipment 23
223 Sanctions 25
224 Procedural Guidelines 27
225 Appeals Commission 29
226 Violation of Sanctions 30

2nd Section

Joint Regulations for Ski Jumping Competitions 31

400 Organisation 31
401 The Competition Committee and Officials 31
402 The Jury and Competition Management 34
403 FIS Officials for Jury and Competition Management 36
404 Judges and Referees 39
405 The Nomination, Reimbursement, and Insurance of Competition Officials 42
406 The Age Classification of Competitors 45

410 The Jumping Hill 45
411 Standards for the Construction of Jumping Hills 46
412 Jumping Hills with Plastic Covering 51
413 Ski Flying Hills 51
414 The Approval of Jumping Hills 52
415 Measuring Devices 55
416 Information for Spectators and Facilities for Media Representatives 57
417 Snow Preparation 58

420 The Administration of the Competition 59
421 Entries, Draws, and the Admission of Reserves 59
422 The Competition 60
423 The Repetition of a Jump 61
424 Training on the Jumping Hill before the Competition 61

430 The Judging of the Ski Jump 62
431 The Judging of the Ski Jump Performance 62
432 The Measuring of Distance 64
433 The Calculating and Announcing of Results 65

440 Sanctions, Protests, Disciplinary Measures 67
441 Sanctions, Disqualifications 67
442 Protests 68
443 Disciplinary Measures 68

3rd Section

Regulations for the Administration of Specific Types of Competitions 70

450 Types of Ski Jumping Competitions 70
451 International Championships on Normal and Large Hills 70
452 International Competitions on One Hill (Normal or Large Hill) 71
453 Team Competitions for Ski Jumping 72
454 Ski Flying Competitions 73

200 Joint Regulations for all Competitions

200.1 All events in the FIS Calendar must be held under the applicable FIS Rules[1].

200.2 Organisation and Conduct

Rules and instructions for the organisation and conduct of the various competitions are to be found in their respective rules.

200.3 Participation

Competitions listed in the FIS Calendar are only open to all properly licensed competitors entered by their National Ski Associations in accordance with current quotas.

200.4 Special Regulations

The FIS Council can authorise a National Ski Association to adopt rules and regulations to organise national or international competitions with different grounds for qualification but only provided that they do not go beyond the limits laid down in the present rules.

200.5 Control

All competitions listed in the FIS Calendar must be supervised by a Technical Delegate of the FIS.

200.6 Every legal sanction imposed and published in respect of a competitor, official or trainer will be recognised by the FIS and the National Ski Associations respectively.

201 Classification and Types of Competitions

201.1 Competitions with Special Rules and/or Limited Participation

National Ski Associations affiliated with the FIS - or clubs belonging to these National Ski Associations with the approval of their association - may invite neighbouring National Ski Associations or their clubs to their own competitions. But these competitions must not be promulgated or announced as international competitions, and the limitation must be made clear in the announcement.

201.1.1 Competitions with special rules and/or limited participation or including non-members may be held under special competition rules as approved by the FIS Council. Any such rules must be published in the announcement.

201.2 Competitions with Non-Members of the FIS

The FIS Council can authorise one of its member National Ski Associations to invite a non-member organisation (military etc.) to competitions, or accept invitations from such an organisation.

[1] Throughout the ICR, the use of the masculine he/his, etc also includes the feminine she/her, etc

201.3 Classification of Competitions

201.3.1 Olympic Winter Games, FIS World Ski Championships and FIS World Junior Ski Championships

201.3.2 FIS World Cups

201.3.3 FIS Continental Cups

201.3.4 International FIS Competitions (FIS Races)

201.3.5 Competitions with Special Participation and/or Qualifications

201.3.6 Competitions with Non-Members of the FIS

201.4 FIS Disciplines

A discipline is a branch of a sport and may comprise one or several events. For example Cross-Country Skiing is a FIS Discipline, whereas the Cross-Country Sprint is an Event.

201.4.1 Recognition of Disciplines in the International Ski Federation

New disciplines, comprising one or several events, widely practised in at least twenty-five countries and on three continents may be included as part of the programme of the International Ski Federation.

201.4.2 Exclusion of Disciplines from the International Ski Federation

If a discipline is no longer practised in at least twelve National Ski Associations on at least two continents the FIS Congress may decide to exclude the discipline from the programme of the International Ski Federation.

201.5 FIS Events

An event is a competition in a sport or in one of its disciplines. It results in a ranking and gives rise to the award of medals and/or diplomas.

201.6 Types of Competitions

International competitions consist of:

201.6.1 Nordic Events

Cross-Country, Rollerskiing, Ski Jumping, Ski Flying, Nordic Combined, Team Competitions in Nordic Combined, Nordic Combined with Rollerskiing or In-line, Team Ski Jumping, Ski Jumping on plastic jumping hills, Popular Cross-Country races

201.6.2 Alpine Events

Downhill, Slalom, Giant Slalom, Super-G, Parallel Competitions, Combined, KO, Team Competitions

201.6.3 Freestyle Ski Events

Moguls, Dual Moguls, Aerials, Ski Cross, Halfpipe, Slopestyle, Big Air, Team Competitions

201.6.4 *Snowboard Events*
Slalom, Parallel Slalom, Giant Slalom, Parallel Giant Slalom, Super-G, Halfpipe, Snowboard Cross, Big Air, Slopestyle, Team Competitions

201.6.5 *Telemark Events*

201.6.6 *Firngleiten*

201.6.7 *Speed Skiing Events*
Speed 1 (S1), Speed 2 (S2), Speed 2 Junior (S2J)

201.6.8 *Grass Ski Events*

201.6.9 *Combined Events with other Sports*

201.6.10 *Youth, Masters, Para Snow Events, etc.*

201.7 FIS World Championship Programme

201.7.1 To be included in the programme of the FIS World Championships, events must have a recognised international standing both numerically and geographically, and have been included for at least two seasons in the World Cup before a decision about their admission can be considered.

201.7.2 Events are admitted no later than three years before specific FIS World Championships.

201.7.3 A single event cannot simultaneously give rise to both an individual and a team ranking.

201.7.4 Medals may only be awarded at the FIS World Championships and FIS Junior World Championships in all disciplines (Alpine, Nordic, Snowboard, Freestyle, Grass Skiing, Rollerski, Telemark, Speed Skiing) when there are a minimum of 8 nations participating in team competitions and 8 nations represented in an individual event.

202 FIS Calendar

202.1 Candidature and Announcement

202.1.1 Each National Ski Association is entitled to present its candidature for the organising of the FIS World Ski Championships in accordance with the published "Rules for the Organisation of World Championships"

202.1.2 For all other competitions, the registrations for inclusion in the International Ski Calendar have to be made to FIS by the National Ski Association according to the Rules for the FIS Calendar Conference published by the FIS.

202.1.2.1 The applications of the National Ski Associations (NSA) are entered byusing the FIS Calendar program in the member section of the FIS website: www.fis-ski.com by 31st August (31st May for the Southern Hemisphere).

202.1.2.2 *Allocation of competitions*

Allocation of the competitions to the National Ski Associations is made through the electronic communication process between FIS and the National Ski Associations. In the case of FIS World Cup competitions, the calendars are subject to the approval of the Council, on proposal of the respective Technical Committee.

202.1.2.3 *Homologations*

Competitions that appear in the FIS Calendar may only take place on competition courses or jumping hills homologated by the FIS.
The homologation certificate number must be indicated when applying for the inclusion of competition in the FIS Calendar.

202.1.2.4 *Publication of the FIS Calendar*

The FIS calendar is published by FIS on the FIS website www.fis-ski.com. It will be updated to reflect cancellations, postponements and other changes continuously by FIS.

202.1.2.5 *Postponements*

In case of the postponement of a competition listed in the FIS Calendar, the FIS has to be informed immediately and a new invitation must be sent to the National Ski Associations, otherwise the competition cannot be considered for FIS points.

202.1.2.6 *Calendar Fees*

In addition to the annual subscription, a calendar fee is set by the FIS Congress and is due for each year and for each event listed in the FIS Calendar. For additional events, a 50% surcharge will be made in addition to the regular calendar fee for applications submitted 30 days before the date of the competition. The calendar fee for a competition that has to be rescheduled remains the responsibility for payment in full of the original organising National Ski Association.

At the beginning of the season, each NSA will receive an invoice for 70 % of its total invoice from the previous season. This amount will be debited from its FIS account. At the end of the season each NSA will receive a detailed invoice for all registered competitions during the season. The balance will be subsequently be debited or credited to the NSA account at FIS.

202.1.3 *Appointment of Race Organiser*

In the event that the National Ski Association appoints a race organiser, such as an affiliated ski club, it shall do so using the form “Registration Form National Ski Association and Organiser” or by means of a similar written agreement. An application by a National Ski Association for inclusion of an event on the International Ski Calendar shall mean that the necessary agreement to organise the event has been established.

202.2 Organisation of Races in other Countries

Competitions which are organised by other National Ski Associations may only be included in the FIS Calendar when the National Ski Association of the country concerned where the competitions will be organised gives its approval.

203 Licence to participate in FIS Races (FIS Licence)

A licence to participate in FIS races is issued by a National Ski Association to competitors who fulfil the criteria for participation through registering the competitor with FIS in the respective discipline(s).

203.1 The FIS licence year begins on July 1st and finishes on June 30th of the following year.

203.2 To be eligible for participation in FIS events, a competitor must have a licence issued by his National Ski Association. Such a licence shall be valid in the Northern and Southern hemispheres for the licence year only. The validity of a licence can be limited to participation in one specific country or in one or more specific events.

203.2.1 The National Ski Association must guarantee that all competitors registered with a FIS License to participate in FIS races accept the Rules of the International Ski Federation, in particular the provision which foresees the exclusive competence of the Court of Arbitration for Sport as the court of appeal in doping cases.

203.3 A National Ski Association may only issue a FIS licence to participate in FIS races when the competitor has proven his nationality and therefore eligibility by submitting a copy of his passport and signed the Athletes Declaration in the form approved by the FIS Council and returned it to his National Ski Association. All forms from under-age applicants must be counter signed by their legal guardians. Both the copy of the passport and signed Athletes Declaration must be made available to FIS on request.

203.4 During the FIS licence year, a competitor may only participate in International FIS competitions with a FIS licence to participate in FIS races issued by one National Ski Association.

203.5 Application for a change of FIS Licence Registration

All applications to change licence registration from one member National Ski Association to another are subject to consideration by the FIS Council at its Meetings in the spring. In principle an application to change licence registration will not be granted unless the competitor demonstrates his personal association with the new nation.

Prior to submitting an application to change licence registration a competitor must possess the citizenship and passport of the country for which he wishes to compete. In addition, the competitor must have had his principal legal and effective place of residence in the new country for a minimum of two (2) years immediately prior to the date of the request to change registration to the new country/National Ski Association. An exception to the two year residency rule may be waived if the competitor was born in the territory of the new country, or whose mother or father is a national of the new country. Applications will not be accepted if a parent has obtained a passport for the new country, but is not resident, and/or there is no family ancestry.

Furthermore the competitor is required to submit a detailed explanation with the application about his personal circumstances and the reason for requesting a change of licence registration.

203.5.1 If a competitor has already participated in FIS calendar events for a National Ski Association, he must have the written agreement to be released from the former National Ski Association in addition to the citizenship, passport and residency requirements in art. 203.5 before the new National Ski Association may submit a request to FIS for a change of registration.
If such a written agreement is not given, the competitor may not participate in any FIS calendar events for a period of twelve months from the end of the last season in which he competed for his present National Ski Association, nor may he be issued with a licence to participate in FIS races by the new National Ski Association.
These rules are also valid when a competitor has more than one nationality and would like to change National Ski Association licence registration.

203.5.2 The FIS Council reserves the right in its absolute discretion, to grant or to decline to grant, a change of licence notwithstanding the fulfilment of the aforementioned conditions where it deems it is contrary to the spirit of the rule and in the best interests of the International Ski Federation to do so (e.g. to decline to grant a change of licence if a member National Ski Association tries to “import” a competitor).

203.5.3 In the event that a competitor does not fulfil all the criteria required to apply for a change of National Ski Association licence registration, the onus shall be on the competitor to demonstrate in writing to the satisfaction of the FIS Council that exceptional circumstances exist and it is in the best interests of the International Ski Federation to grant the change.

203.5.4 A competitor will retain his FIS points if he changes his National Ski Association under the condition that the former National Ski Association granted the release of the competitor.

203.5.5 In the event that any of the documents for an application to change licence registration submitted by the National Ski Association (letter of release from the former National Ski Association, passport, residency papers) are found to be false, the FIS Council will sanction the competitor and the new National Ski Association.

204 Qualification of Competitors

204.1 A National Ski Association shall not support or recognise within its structure, nor shall it issue a licence to participate in FIS or national races to any competitor who:

204.1.1 has conducted himself in an improper or unsportsmanlike manner or has not respected the FIS medical code or anti-doping rules,

204.1.2 accepts or has accepted, directly or indirectly, any money-payments for the participation at competitions,

204.1.3 accepts or has accepted a prize of a higher value than fixed by article 219,

204.1.4 permits or has permitted his name, title or individual picture to be used for advertising, except when the National Ski Association concerned, or its pool for this purpose, is party to the contract for sponsorship, equipment or advertisements.

204.1.5 knowingly competes or has competed against any skier not eligible according to the FIS Rules, except if:

204.1.5.1 the competition is approved by the FIS Council, is directly controlled by the FIS or by a National Ski Association, and the competition is announced "open",

204.1.6 has not signed the Athletes Declaration,

204.1.7 is under suspension.

204.2 With the issuance of a licence to participate in FIS competitions and entry the National Ski Association confirms, that valid and sufficient accident insurance for training and competition is in place for the competitor and assumes full responsibility.

205 Competitors Obligations and Rights

Competitors whatever their age, gender, race, religion or belief, sexual orientation, ability or disability have the right to participate in snow sports in a secure environment and protected from abuse.
FIS encourages all member nations to develop policies to safeguard and promote the welfare of children and young persons.

205.1 The competitors are obliged to make themselves familiar with the appropriate FIS Rules and must comply with the additional instructions of the Jury. Competitors must also follow the FIS rules regulations.

205.2 Competitors are not permitted to use doping (see FIS Anti-Doping Rules and Procedural Guidelines).

205.3 As stated in the Athletes Declaration, competitors have the right to inform the Jury of safety concerns they may have regarding the training and competition courses. More details are given in the corresponding discipline rules.

205.4 Competitors who do not attend the prize-giving ceremonies without excuse lose their claim to any prize including prize money.
In exceptional circumstances, the competitor may be represented by another member of his team, but this person has no right to take his place on the podium.

205.5 Competitors must behave in a correct and sportsmanlike manner towards members of the Organising Committee, volunteers, officials and the public.

205.6 Support for the Competitors

205.6.1 A competitor is registered with FIS by his National Ski Association to participate in FIS races may accept:

205.6.2 full compensation for travel cost to training and competition,

205.6.3 full reimbursement for accommodation during training and competitions,

205.6.4 pocket money,

205.6.5 compensation for loss of income according to decisions of his National Ski Association,

205.6.6 social security including insurance for training and competition,

205.6.7 scholarships.

205.7 A National Ski Association may reserve funds to secure a competitor's education and future career after retiring from active competitive skiing.
The competitor has no claim to these funds which shall be dispensed only according to the judgement of his National Ski Association.

205.8 Gambling on Competitions

Competitors, trainers, team officials and technical officials are prohibited from betting on the outcome of competitions in which they are involved.
Reference is made to the FIS Rules on the Prevention of the Manipulation of Competitions:
https://www.fis-ski.com/en/inside-fis/document-library/general-regulations

206 Advertising and Sponsorship

In the context of this rule advertising is considered as the presentation, of signage or other visibility at the venue informing the public of the name of a product or service to achieve awareness of a company or an organisation and its brand name, activities, products or service. On the other hand Sponsorship provides a company with the opportunity to have a direct association with the competition or series of events.

206.1 Olympic Winter Games and FIS World Championships

All Advertising and Sponsorship rights to the Olympic Winter Games and FIS World Championships belong to the IOC and to the FIS respectively and are subject to separate contractual arrangements.

206.2 FIS Events

For all FIS Events the FIS Advertising Rules define the advertising opportunities in the competition area and are subject to the approval of the FIS Council. For the FIS World Cup Events the FIS Advertising Rules form an integral part of the FIS Organisers Agreement with the National Ski Associations and Organisers.

206.3 Member National Ski Associations

Each FIS affiliated National Ski Association that organises events in its country which are included in the FIS calendars, has the authority as the owner of the event advertising rights to enter into contracts for their sale. In the case of FIS World Cup competitions these rights shall be defined in the Organiser Agreement upon approval of the FIS Council and considering the National Ski Associations responsibilities.
In cases where a National Ski Association organises events outside its own country these FIS Advertising rules also apply.

206.4 Title and Presenting Sponsorship Rights

In the case of FIS series approved by the FIS Council, FIS markets the rights of the title/presenting sponsor (alternative naming possible) package. For the FIS World Cup series these are marketed to appropriate sponsors that promote the image and values of the discipline concerned. The revenue generated from the sale of the title/presenting sponsor rights is invested by FIS to provide a professional organisation.

206.5 Use of Markings and supports

All Advertising and commercial markings and supports used shall comply with the technical specifications set forth in the applicable FIS Advertising Rules.

206.6 Advertising Packages

Location, number, size and form of the advertising are specified in the FIS Advertising Rules for each discipline. Detailed information including graphical illustrations is laid out in the discipline-specific Marketing Guides which are published on the FIS Website. The Marketing Guides are reviewed and updated as necessary by the Committee for Advertising Matters and approved by the FIS Council prior to their publication.

206.7 Sponsorships by commercial betting companies

206.7.1 FIS will not allocate Title / Presenting Sponsor rights to commercial betting companies

206.7.2 Sponsorships of events by commercial betting companies is permitted subject to 206.7.3 below.

206.7.3 Advertising of commercial betting companies or other betting activities on or with the athletes (head sponsors, competition suits, starting bibs) is prohibited with the exception of lotteries and companies operating non-sports betting only.

206.8 A National Ski Association or its pool may enter into contracts with a commercial firm or organisation for financial sponsorship and or the supply of goods or equipment if the specific company or organisation is acknowledged as an Official Supplier or Sponsor by the National Ski Association. Advertising using photographs, likeness or names of FIS competitors with any sportsman not eligible according to either the FIS eligibility rules or the eligibility rules of the IOC, is forbidden.
Advertising with or on competitors with tobacco or alcohol products or drugs (narcotics) is forbidden.

206.9 All compensation under such contracts must be made to the National Ski Association or its ski pool which shall receive the compensation subject to the regulations of each National Ski Association. Competitors may not directly receive any part of such compensation except as stated in art. 205.6. The FIS may at any time call for a copy of the contract.

206.10 Equipment goods supplied to and used by the national team must, with reference to markings and trademarks, conform with the specifications stated in art. 207.

207 Competition Equipment and Commercial Markings

207.1 Competition Equipment at FIS Events

Only the competition equipment, according to the FIS rules on advertising, provided by the National Ski Association, complete with the commercial markings approved by the National Ski Association, may be worn in FIS World Cup and FIS World Ski Championships competitions. Obscene names and/or symbols on clothing and equipment are forbidden.

207.1.1 At FIS World Ski Championships, FIS World Cup and all events on the FIS Calendar, a competitor is not allowed to take equipment (skis,/board, poles, ski boots, helmet, glasses) to the official ceremonies involving anthems and/or flag raising. Holding/carrying equipment on the victory podium after conclusion of the whole ceremony (handing over trophies and medals, national anthems) for press photos, pictures, etc. is however permitted.

207.1.2 Winners presentation / Equipment on the podium

At FIS World Ski Championships and all events of the FIS Calendar, a competitor is allowed to take the following equipment on the podium:

- Skis / Snowboards
- Footwear: The athletes may wear their boots on their feet, but are not allowed to wear them anywhere else (such as around their neck). Other shoes cannot be taken on the podium during presentation except if they are worn on the feet.
- Poles: not on/around skis, normally in the other hand
- Goggles: either worn or around the neck
- Helmet: if worn only on the head and not on another piece of equipment, e.g. skis or poles
- Ski straps: maximum of two with name of the producer of skis; eventually one can be used for a wax company
- Nordic Combined and Cross-Country Ski Poles Clips. A clip can be used to hold the two poles together. The clip can be the width of the two poles, though not wider than 4 cm. The length (height) can be 10 cm. The long side of the clip is to be parallel to the poles. The commercial marking of the pole manufacturer can cover the entire surface of the clip.
- All other accessories are prohibited: waist bags with belt, phones on neckbands, bottles, rucksack/backpack, etc.

207.1.3 An unofficial presentation (flower ceremony) of the winner, and the winners ceremony immediately after the event in the event area with the national anthem even before the protest time has expired, is allowed at the organiser's own risk. Visible wearing of the starting bibs is mandatory.

207.1.4 Visible wearing of the starting bib of the event or other outerwear of the NSA is mandatory in the restricted corridor (including the leader board and TV interview locations).

207.2 Commercial Markings

Specifications about the size, the form and the number of commercial markings on equipment and clothing as well as the by-laws for commercial markings and for advertising are to be reviewed by the Committee for Advertising Matters and approved by the FIS Council each spring for the following competition season and published by the FIS.

207.2.1 The rules governing commercial markings and advertising on equipment and clothing as well as the relevant by-laws published in the Specifications for Competition Equipment/Commercial Markings must be followed.

207.2.2 Any competitor who breaches the advertising rules is subject to sanction, as provided for in art. 223.1.1. An offence for which a sanction may apply and a penalty be imposed is defined as conduct that is in violation or non – observance of competition rules.

207.2.3 If a National Ski Association fails to enforce these rules with on its own competitor(s) or for any reason prefers to refer the case to the FIS, the FIS may take immediate steps to suspend a competitor's licence. The competitor concerned and/or his National Ski Association have the right to make an appeal before a final decision is taken.

207.2.4 If an advertiser uses the name, title or individual picture of a competitor in connection with any advertisement, recommendation or sale of goods without the approval or knowledge of the competitor, the competitor may give a "power of attorney" to his National Ski Association or to the FIS to enable them, if necessary, to take legal action against the company in question. If the competitor concerned fails to do so, the FIS shall judge the situation as if the competitor had given permission to the company.

207.2.5 The FIS Council shall be informed of infractions or breaches of these rules that have taken place with regard to the qualification of competitors, sponsorship and advertising and support for the competitors, and shall review what measures to take to deal with cases.

208 Exploitation of Electronic Media Rights

208.1 General Principles

208.1.1 Olympic Winter Games and FIS World Championships

All Media rights to the Olympic Winter Games and FIS World Championships belong to the IOC and to the FIS respectively, and are subject to separate contractual arrangements.

208.1.2 Rights owned by the member National Ski Associations

Each FIS affiliated National Ski Association that organises events in its country which are included in the annual FIS calendars, has the authority as the owner of the electronic media rights to enter into contracts for the sale of the electronic media rights on those events. In cases where a National Ski Association organises events outside its own country, these rules also apply, subject to bi-lateral agreement with the National Ski Association of the country where the event takes place.

208.1.3 Promotion

Contracts shall be prepared in consultation with the FIS with the intention of giving the widest promotion and exposure to the sports of skiing and snowboarding and considering the best interests of the National Ski Associations.

208.1.4 *Access to events*

For all competitions, admission of personnel and their equipment to the media areas will be limited to those having the necessary accreditation and access passes. Priority access will be given to rights holders and the system of accreditation and access control must avoid possible abuse by non-rights holders.

208.1.5 *Control by the FIS Council*

The FIS Council exercises control over the adherence to the principles of this Rule by National Ski Associations and all organisers. Should a contract or individual clauses thereof, create a major conflict of interest for the FIS, a member National Ski Association or its organiser, then this will be evaluated by the FIS Council. Full information will be provided so that the appropriate solution can be found.

208.2 Definitions

In the context of this rule the following definitions will apply:

"Electronic Media Rights" means the rights for Television, Radio, Internet and Mobile devices.

"Television rights" means the distribution of television images, both analogue and digital, comprising video and sound, by means of terrestrial transmitters, satellite, cable, fibre or wire for public and private viewing on television screens. Pay-per-view, subscription, interactive TV, video on demand services, IPTV or similar technologies, are also included in this definition.

"Radio rights" means the distribution and reception of radio programmes, both analogue and digital, over the air, by wire or via cable to devices, both fixed and portable.

"Internet" means access to images and sound through interconnected computer networks.

"Mobile and portable devices" means the provision of images and sound through a telephone operator and receivable on mobile telephone or other non-fixed devices, such as Personal Digital Assistants.

208.3 Television

208.3.1 *Standard of production and promotion of competitions*

In the agreements concerning production with a TV organisation or agency acting as host broadcaster, the quality of TV transmissions for ski and snowboard events published in the FIS Calendar – especially for FIS World Cup competitions – must be considered. Of particular importance, while taking into consideration applicable national laws and rules affecting broadcasting, are:

a) Top quality and optimal production of a TV signal (for live or deferred transmission depending on the event) in which sport is the centrepiece;

b) Adequate consideration and appearance of venue advertising and event sponsors;

c) A standard of production in conformity with the FIS TV Production Guidelines and appropriate to current market conditions for the discipline and to the level of the FIS competition series. This means live coverage of the entire event including the winner presentation for live transmission (unless circumstances determine that a live production is not provided). This coverage shall be produced in a neutral way, shall not concentrate on any athlete or nation and shall show all competitors

d) The live international signal of the host broadcaster must include appropriate graphics in English, particularly the official FIS logo, timing and data information and results, and international sound.

e) Where it is appropriate to the individual TV market, there should be live TV transmission in the country where the event takes place and in other countries with a high interest.

208.3.2 *Production and Technical costs*

Except when otherwise agreed between the National Ski Association and the agency/company managing the rights, the cost of producing the television signal for the exploitation of the different rights will be borne by the broadcaster having acquired the rights in the country where the competition takes place or a production company mandated to produce the signal by the company owning the rights. In certain cases, the organiser or the National Ski Association may assume these costs.

For each of the different rights granted under this rule the technical expenses that are to be paid for by those organisations that have acquired the rights and which are seeking to access the television signal (original picture and sound without commentary), have to be agreed between the producing company or the agency/company managing the rights, as applicable. This also applies to any other production costs that may be requested.

208.3.3 *Short extracts*

Short extracts granting news access for non-rights holders are to be provided to television companies according to the following rules. It is noted that in a number of countries national legislation governs the showing of short extracts in news programmes.

These extracts may only be used in regularly scheduled news programmes and cannot be kept for archive purposes

a) In those countries where legislation exists regarding news access to sporting events then this legislation will always hold precedence for reporting on FIS events.

b) In those countries where no legislation exists regarding news access by competing networks and provided that agreements between the company managing the rights and the primary rights holder take precedence then short extracts of a maximum of 90 seconds news access will be granted to competing networks by the agency/company managing the rights for transmission four hours after the rights holding network has shown the competition. The use of this material will cease 48 hours after the end of the competition. If the rights holding network delays its transmissions by more than 72 hours from the end of the competition, then competing networks can show extracts of a maximum of 45 seconds

commencing 48 hours after and ending 72 hours after the event itself. Any request to exploit short extracts shall be addressed to the agency/company managing the rights which shall grant to the broadcasters access to the short extracts subject to agreement regarding the technical costs incurred to receive the material.

c) In those countries where no transmission rights have been purchased by a television company, all television organisations will be able to transmit short extracts of 45 seconds as soon as the material is available, subject to agreement with the agency/company managing the rights regarding the technical costs to be incurred to receive the material. Permission for the use of this material will expire after 48 hours.

d) Short extracts will be produced by the host broadcaster or the agency/ company managing the rights and distributed by that agency/company, taking into consideration 208.3.2 above.

208.4 Radio

The promotion of FIS events through radio programmes will be encouraged by making available accreditation to the principle radio station(s) in each interested country. Access to the venue will be granted solely to those radio organisations that have obtained the necessary contractual authorisation from the rights holder, and will be only for the production of radio (audio) programmes. If accepted by national practice and the authorisation is granted, these programmes can also be distributed on the internet site of the radio station.

208.5 Internet

Unless the contract for the sale of the Electronic Media Rights on FIS events states otherwise, each television rights holder that also acquires the internet rights, will ensure that video streams from its website other than short extracts are geoblocked against access from outside its own territory. Regularly scheduled news bulletins containing material of FIS events may be streamed on the rights holding broadcaster's website, provided no changes are made to the bulletin as transmitted in the original programme.

Video and audio material produced in public areas where accreditation, tickets or other permissions are not required to gain access must not contain race footage. It is recognised that new technology provides members of the public with the possibility to produce unauthorised video recordings that may be posted on websites. Appropriate information advising that the unauthorised production and use of video material is prohibited and that legal proceedings could be taken, will be shown at all entrances and printed on entrance tickets.

All National Ski Associations and the rights holders/agencies will give permission for short extracts to be placed on the FIS website for non-commercial use subject to the following conditions:

a) When short extracts have not been acquired for Internet distribution the maximum duration of the news material from FIS competitions will be 30 seconds per discipline/per session and will be accessible on the FIS website until 48 hours after the end of the competition. The financial conditions relating to the provision of this material will be agreed between the FIS and the rights owner.

b) The material will be provided by the rights owner or host broadcaster as soon as possible, but at the latest six hours after the end of the competition.

208.6 Mobile and portable devices

In the cases where the rights for distribution by mobile and portable devices have been awarded, the rights purchaser/operator will be free to produce from the television signal the content it considers best meets the needs of its customers. Any live streaming of television programmes on a national basis using these devices shall not be altered from that available through other distribution channels.

In countries where no mobile distribution rights have been sold, short extracts or clips of a maximum duration of 20 seconds will be offered to operators when the material has been produced and for a period of 48 hours on the condition that the operators pay all related technical costs to the agency/company managing the rights.

208.7 Future developments

The principles contained in this Rule 208 shall be the basis for the exploitation of Electronic Media Rights to FIS events in the future. The FIS Council, on the recommendation of the National Ski Associations, the relevant commissions and experts, will establish the conditions considered appropriate to each new development.

209 Film Rights

All agreements regarding film productions of FIS competitions will be between the film producer and the National Ski Association or the company managing the related rights. All contractual arrangements regarding the exploitation of other media rights will be respected.

210 Organisation of Competition

211 The Organisation

211.1 The Organiser

211.1.1 The Organiser of a FIS competition is the person or group of persons who make the necessary preparations and directly carry out the running of the competition in the resort.

211.1.2 If the National Ski Association itself is not the competition organiser, it may appoint an affiliated club to be the organiser.

211.1.3 The organiser must ensure that accredited persons accept the regulations regarding the competition rules and Jury decisions, and in World Cup races the organiser is obliged to obtain the signature of all persons who do not have a valid FIS season accreditation to this effect.

211.2 The Organising Committee

The Organising Committee consists of those members (physical or legal) who are delegated by the organiser and by the FIS. It carries the rights, duties and obligations of the organiser.

211.3 Organisers which hold competitions involving competitors not qualified under art. 203 - 204 have violated the International Competition Rules and measures are to be taken against them by the FIS Council.

212 Insurance

212.1 The organiser must take out liability insurance for all members of the Organising Committee. The FIS shall provide its employees and appointed officials, who are not members of the Organising Committee (e.g. equipment controller, medical supervisor, etc.), with liability insurance when they are acting on behalf of the FIS.

212.2 Before the first training day or competition, the organiser must be in possession of a binder or cover notes issued by a recognised insurance company and present it to the Technical Delegate. The Organising Committee requires liability insurance with coverage of at least CHF 1 million; whereby it is recommended that this sum is at least CHF 3 million; this sum can be increased according to decisions of the FIS Council (World Cup etc).
Additionally, the policy must explicitly include liability insurance claims by any accredited participant, including competitors, against any other participant including but not limited to officials, course workers, coaches, etc

212.3 The Organiser respectively its' National Ski Association may request the FIS insurance broker to arrange cover for the competition (at the cost of the Organiser) if the organiser does not have the necessary insurance cover in place.

212.4 All competitors participating in FIS events must carry accident insurance, in sufficient amounts to cover accident, transport and rescue costs including race risks, as well as an appropriate third party liability insurance. The National Associations are responsible for adequate insurance coverage of all their competitors sent and inscribed by them.
The National Ski Association or their competitors must be able to show proof of the respective insurance coverage at any time on request of the FIS, one of its representatives or the organising committee.

212.5 All trainers and officials inscribed and sent to FIS events by a National Association must carry accident and third party liability insurance, in sufficient amounts to cover accident, transport and rescue costs from damages caused. The National Ski Association or their trainers and officials must be able to show proof of the respective insurance coverage at any time on request of the FIS, one of its representatives or the organising committee.

213 Programme

A programme must be published by the organisers for each competition listed in the FIS Calendar which must contain the following:

213.1 name, date and place of the competitions, together with information on the competition sites and the best ways of reaching them,

213.2 technical data on the individual competitions and conditions for participation,

213.3 names of principal officials,

213.4 time and place for the first team captains' meeting and the draw,

213.5 timetable for the beginning of the official training and the start times,

213.6 location of the official notice board,

213.7 time and place for the prize-giving,

213.8 final date of entry and address for entries, including telephone, telefax and e-mail address.

214 Announcements

214.1 The Organising Committee must publish an announcement for the event. It must contain the information required by art. 213.

214.2 Organisers are bound by the rules and decisions of the FIS in limiting the number of entries. A further reduction in entries is possible under art. 201.1 provided it is made clear in the announcement.

214.3 Postponements or cancellations of competitions and programme alterations must be communicated immediately by telephone, e-mail or telefax to the FIS, all invited or entered National Ski Associations and the appointed TD. Competitions moved to an earlier date must be approved by the FIS.

215 Entries

215.1 All entries must be sent so that the Organising Committee receives them before the final date of entry. The organisers must have a final and complete list not later than 24 hours before the first draw.

215.2 National Ski Associations are not permitted to enter and draw the same competitors in more than one competition on the same date.

215.3 Only National Ski Associations are entitled to make entries for international competitions. Every entry should include:

215.3.1 code number, name, first name, year of birth, National Ski Association;

215.3.2 an exact definition of the event for which the entry is made.

215.4 Entries for FIS World Championships (see Rules for the Organisation of FIS World Championships).

215.5 The entry of a competitor by the National Ski Association for a race shall constitute a contract solely between the competitor and the organiser and shall be governed by the Athletes Declaration.

216 Team Captains' Meetings

216.1 The time and location of the first team captains' meeting and of the draw must be shown in the programme. The invitations for all other meetings have

to be announced to the team captains at their first meeting. Emergency meetings must be announced in good time.

216.2 Representation by a substitute from another nation during discussions at team captains' meetings is not allowed.

216.3 The team captains and trainers must be accredited by the organisers according to quota.

216.4 Team captains and trainers must obey the ICR and the decisions of the Jury and must behave in a proper and sportsmanlike manner.

217 Draw

217.1 Competitors' starting order for each event and each discipline is decided according to a specific formula by draw and/or point order.

217.2 The competitors entered by a National Ski Association will only be drawn if provided written entries have been received by the organiser before the closing date.

217.3 If a competitor is not represented at the draw by a team captain or trainer, he will only be drawn if it is confirmed by telephone, telegram, e-mail or telefax by the beginning of the meeting that the competitors who are entered will participate.

217.4 Competitors who have been drawn and are not present during the competition must be named by the TD in his report, indicating if possible the reasons for absence.

217.5 Representatives of all the nations taking part must be invited to the draw.

217.6 If a competition has to be postponed by at least one day, the draw must be done again.

218 Publication of Results

218.1 The unofficial and official results will be published in accordance with the rules for the specific event.

218.1.1 *Transmission of Results*

For all international competitions, there must be direct communication between the Start and the Finish. In Olympic Winter Games the communications must be assured by fixed wiring.

In the data service area, access to the internet (at least ADSL speed) is required for World Cup, World Championships and Olympic Winter Games competitions.

218.2 The data and timing generated from all FIS competitions is at the disposal of FIS, the organiser, the National Ski Association and participants for use in their own publications, including websites. Use of data and timing on websites is subject to the conditions laid down in the FIS Internet Policies.

218.3 FIS Internet Policies and Exchange of Data relating to the FIS Competitions

218.3.1 *General*

As part of the ongoing promotion of skiing and snowboard, the International Ski Federation encourages and appreciates the efforts made by the National Ski Associations to provide messages and information to their members and fans. An increasingly important medium for this provision of information is through the Internet.

The following policy has been established in order to assist National Ski Associations through the provision of data from FIS competitions, and to clarify certain conditions that relate to the use and presentation of the data from FIS competitions.

218.3.2 *FIS Calendar data*

The online FIS Calendar programme has been developed for the free use of National Ski Associations and is available in the members Section of the FIS website.

218.3.3 *Results and Standings*

National Ski Associations can obtain official results, after they have been approved by the FIS Points verification procedure at the FIS Office. This data will be available on request to the FIS IT Manager who will provide the necessary instructions and/or routines on a case-by-case basis. The FIS World Cup results will include a credit to the results service providers. Standings from the various Cup series will also be available after receipt from the results service providers in the case of the FIS World Cup, or they have been input manually for other Cup series.

1. The results and data from FIS competitions may only be used on the National Ski Associations', Organisers' and participants' websites and may not be passed on for commercial use to third parties or organisations.
   The National Ski Association may download the data into its' own software for evaluating performances, etc.

2. National Ski Associations who wish to display results on their website, but do not have a database structure to upload the raw data can create a link to the relevant page of the FIS website. The exact addresses can be obtained from the FIS IT Manager.

3. A link will be established from the FIS Website to all National Ski Associations with their own website, as well as the ski industry and relevant media websites on requests. A reciprocal link to the FIS website should also be created.

218.3.4 *Organisers access to results*

Organisers of FIS World Cup races can obtain official results from their races after they have been approved by the FIS Points verification procedure in the results database. The upload is a computer-automated procedure for World Cup races and takes place immediately after the end of the race.

The pdf file containing the results and standings can be downloaded from www.fis-ski.com followed by the discipline code and the name of the site: AL (Alpine), CC (Cross-Country), JP (Ski Jumping), NK (Nordic Combined); SB (Snowboarding), FS (Freestyle Skiing) etc. The individual competition can be identified by the competition codex as published on the detailed page of the calendar on www.fis-ski.com.

219 Prizes

219.1 The detailed rules concerning the awarding of prizes will be published by the FIS. Prizes shall consist of mementos, diplomas, cheques or cash. Prizes for records are forbidden. The FIS Council decides in the autumn on the minimum respectively maximum values of the prize money approximately one and a half years before the competition season. The organisers have to inform the FIS by October 15th of the amount.

219.2 If two or more competitors finish with the same time or receive the same points, they shall be given the same placing. They will be awarded the same prizes, titles or diplomas. The allocation of titles or prizes by drawing lots or by another competition is not allowed.

219.3 All prizes are to be awarded no later than the final day of a competition or event series.

220 Team Officials, Coaches, Service Personnel, Suppliers and Firms' Representatives

In principle these regulations apply to all disciplines, taking into consideration the special rules.

220.1 The Organising Committee of an event must provide the Technical Delegate with a list of persons accredited to the competition.

220.2 It is forbidden for suppliers and for persons in their service to advertise inside the restricted area or to wear clearly visible commercial markings on their clothing or equipment which do not conform with art. 207.

220.3 Team officials accredited service personnel and suppliers receive from the FIS an official FIS accreditation and must perform their specified function. The individual organisers are free to accredit additional company representatives or other important persons.

220.4 Only persons who have the official FIS accreditation or a special accreditation from the organiser for course or jumping-hill have access to the courses and jumping-hills (according to special rules of the discipline).

220.5 The Different Types of Accreditation

220.5.1 Technical Delegates, the Jury, and the persons mentioned in art. 220 with clearly visible accreditation have access to the courses and jumping-hills.

220.5.2 Servicemen attached to teams are permitted entry to start area and service area at the finish. They are not allowed entry to the courses or jumping-hills.

220.5.3 Company representatives accredited at the discretion of the organisers who do not have FIS accreditation are not permitted entry to the courses and restricted service areas.

221 Medical Services, Examinations and Doping

221.1 National Ski Associations are responsible for the fitness of their competitors to race. All competitors, male and female are required to undergo a thorough evaluation of their medical health. This evaluation is to be conducted within the competitor's own nation.

221.2 If requested by the FIS Medical Committee or its representative, competitors must undergo a medical examination before or after the competition.

221.3 Doping is forbidden. Any offence under these FIS Anti Doping Rules will be punished under the provisions of the FIS Anti-Doping Rules.

221.4 Doping controls may be carried out at any FIS competition (as well as out-of competition). Rules and procedures are published in the FIS Anti-Doping Rules and FIS Procedural Guidelines.

221.5 Gender of the Competitor

If any question or protest arises as to the gender of the competitor, FIS shall assume responsibility for taking the necessary steps to determine the gender of the competitor.

221.6 Medical Services Required from Event Organisers

The health and safety of all those involved in a FIS competition is a primary concern of all event Organisers. This includes the competitors as well as volunteers, course workers and spectators.

The specific composition of the medical support system is dependent on several variables:

- The size, level, type of the event being held (World Championships, World Cup, Continental Cup, FIS-level, etc.) together with the local medical standards of care and geographic locations and circumstances.
- The estimated number of competitors, support staff and spectators
- The scope of responsibility for the Event Medical Organisation (competitors, support staff, spectators) should also be determined.

The Organiser / The Chief of Medical and Rescue Services must confirm with the race director or technical delegate that the required rescue facilities are in place before starting the official training or competition. In the event of an incident, or issue that prevents the primary medical plan from being utilized, the back-up plan must be in place before recommencing the official training or competition.

The specific requirements concerning facilities, resources, personnel and team physicians are contained in the respective discipline rules and the FIS Medical Guide.

222 Competition Equipment

222.1 A competitor may only take part in a FIS competition with equipment which conforms to the FIS Regulations. A competitor is responsible for the

equipment that he uses (skis, snowboard, bindings, ski boots, suit, etc). It is his duty to check that the equipment he uses conforms to the FIS specifications and general safety requirements and is in working order.

222.2 The term competition equipment encompasses all items of equipment which the competitor uses in competitions. This includes clothing as well as apparatus with technical functions. The entire competition equipment forms a functional unit.

222.3 All new developments in the field of competition equipment must be approved in principle by the FIS.
The FIS does not take any responsibility for the approval of new technical developments, which at the time of introduction may contain unknown risk to the health or cause an increase in the risk of accidents.

222.4 New developments must be submitted by May 1st (Grass Ski August 1st), at the latest, for the following season. The first year new developments can only be approved provisionally for the following season and must be finally confirmed prior to the subsequent competition season.

222.5 The Committee for Competition Equipment publishes equipment by-laws after approval by the FIS Council (definitions or descriptions of the equipment items which are allowed).
In principle unnatural or artificial aids which modify the performance of the competitors and/or constitute a technical correction of the individual's physical predisposition to a defective performance, as well as competition equipment which impact the health of the competitors or increase the risk of accidents are to be excluded.

222.6 Controls

Before and during the competition season or on submission of protests to the Technical Delegate at the competition concerned, various controls can be carried out by members of the Committee for Competition Equipment or official FIS Equipment Controllers. Should there be a well-founded suspicion that regulations were violated, the equipment items must be confiscated immediately by the controllers or Technical Delegates in the presence of witnesses and be forwarded sealed to the FIS, which will submit the items to a final control by an officially recognised institution. In cases of protest against items of the competition equipment, the losing party will bear the investigation costs.
No testing of equipment or material in independent laboratories may be requested at races where a FIS Technical Expert has performed the controls, unless it can be demonstrated that the controls have not been carried out according to the rules.

222.6.1 At all FIS events where official FIS measurement experts using the official FIS measurement tools are appointed, the result of measurements carried out at the time are valid and final, irrespective of previous measurements.

222.7 Prohibited of scientific and medical Equipment at FIS Events

It is prohibited for any National Ski Association, its representative or team members to bring and/or use any of the following scientific or medical equipment ("Equipment") into/at any Event Venue during FIS World

Championships, World Cups and other competitions registered in the FIS Calendar:

- Oxygen tanks, cylinders and related devices;
- Hypoxic or hyperoxic tents, chambers and related devices;
- Cryogenic chambers for whole body cryotherapy and related devices.

It is the responsibility of the National Ski Association to ensure compliance with this Article 222.7 by all its representatives or team members. Failure to respect this Article 222.7 will be subject to Penalties provided by Article 223.3. In case of recurrence, disqualification of an athlete shall be imposed irrespectively of whether the violation of this provision would result in an advantage for the Athlete(s) with regard to the end result of the competition.

In addition to the sanctions listed above, the FIS may order the immediate removal of the Equipment from the Event Venue at the costs of the responsible NSA.

223 Sanctions

223.1 General Conditions

223.1.1 *An offence for which a sanction may apply and a penalty be imposed is defined as conduct that:*

- is in violation or non-observance of competition rules, or
- constitutes non-compliance with directives of the jury or individual members of the jury in accordance with 224.2 or
- constitutes unsportsmanlike behaviour

223.1.2 *The following conduct shall also be considered an offence:*

- attempting to commit an offence
- causing or facilitating others to commit an offence
- counselling others to commit an offence

223.1.3 *In determining whether conduct constitutes an offence consideration should be given to:*

- whether the conduct was intentional or unintentional,
- whether the conduct arose from circumstances of an emergency

223.1.4 All FIS affiliated associations, including their members registered for accreditation, shall accept and acknowledge these rules and sanctions imposed, subject only to the right to appeal pursuant to the FIS Statutes and ICR

223.2 Applicability

223.2.1 *Persons*

These sanctions apply to:

- all persons who are registered with or accredited by the FIS or the organiser of an event published in the FIS calendar (an event) both within and outwith the confines of the competition area and any location connected with the competition, and
- all persons who are not accredited, within the confines of the competition area

223.3 Penalties

223.3.1 The commission of an offence may subject a person to the following penalties:

- Reprimand - written or verbal
- Withdrawal of accreditation
- Denial of accreditation
- Monetary fine not more than CHF 100’000.--
- A time penalty

223.3.1.1 FIS-affiliated associations are liable to the FIS for the payment of any fines and incurred administrative expenses imposed on persons whose registration or accreditation they arranged.

223.3.1.2 Persons not subject 223.3.1.1 also are liable to the FIS for fines and incurred administrative expenses. If such persons do not pay these fines, they shall be subject to a withdrawal of any permission to apply for accreditation to FIS events for a period of one year.

223.3.1.3 Payment of fines is due within 8 (eight) days following their imposition.

223.3.2 All competing competitors may be subject to the following additional penalties:

- Disqualification
- Impairment of their starting position
- Forfeiture of prizes and benefits in favour of the organiser
- Suspension from FIS events

223.3.3 A competitor shall only be disqualified if his mistake would result in an advantage for him with regard to the end result, unless the Rules state otherwise in an individual case.

223.4 A jury may impose the penalties provided in 223.3.1 and 223.3.2, however they may not impose a monetary fine of more than CHF 5'000.-- or suspend a competitor beyond the FIS event at which the offence occurred.

223.5 The following Penalty decisions may be given verbally:

- reprimands
- the withdrawal of accreditation for the current event from persons who had not been registered with the organiser through their National Associations
- the withdrawal of the accreditation for the current event from FIS-accredited persons
- the denial of accreditation to the current event from persons who are within the confines of the competition area or any other location connected with the competition.

223.6 The following Penalty decisions shall be in writing:

- monetary fines
- disqualification
- impaired starting position
- competition suspensions
- withdrawal of accreditation from persons who had been registered through their National Association

- withdrawal of accreditation of FIS accredited persons

223.7 Written Penalty decisions must be sent to the offender (if it is not a competitor), the offender's National Association and the Secretary General of FIS.

223.8 Any disqualification shall be recorded in the Referee's and/or the TD`s Report.

223.9 All penalties shall be recorded in the TD's Report.

224 Procedural Guidelines

224.1 Competence of Jury

The Jury at the event has the right to impose sanctions according to the above rules by majority vote. In the case of a tie, the chairman of the Jury has the deciding vote.

224.2 Within the location, especially during the training and the competition period, each voting Jury member is authorised to issue oral reprimands and withdraw the accreditation which is issued for the current event.

224.3 Collective Offences

If several persons commit the same offence at the same time and under the same circumstances, the Jury's decision as to one offender may be considered binding upon all offenders. The written decision shall include the names of all offenders concerned, and the scope of the penalty to be assessed upon each of them. The decision will be delivered to each offender.

224.4 Limitation

A person shall not be sanctioned if proceedings to invoke such sanction have not been commenced against that person within 72 hours following the offence.

224.5 Each person who is a witness to an alleged offence is required to testify at any hearing called by the Jury, and the Jury is required to consider all relevant evidence.

224.6 The Jury may confiscate objects that are suspected of being used in violation of equipment guidelines.

224.7 Prior to the imposition of a penalty (except in cases of reprimands and withdrawal of accreditation according to 223.5 and 224.2), the person accused of an offence shall be given the opportunity to present a defence at a hearing, orally or in writing.

224.8 All Jury decisions shall be recorded in writing and shall include:

224.8.1 The offence alleged to have been committed

224.8.2 The evidence of the offence

224.8.3 The rule (s) or Jury directives that have been violated

224.8.4 The penalty imposed.

224.9 The penalty shall be appropriate to the offence. The scope of any penalty imposed by the Jury must consider any mitigating and aggravating circumstances.

224.10 Remedies

224.10.1 Except as provided for in 224.11, a penalty decision of the Jury may be appealed in accordance with the provisions in the ICR.

224.10.2 If an appeal is not filed within the deadline established in the ICR, the penalty decision of the Jury becomes final.

224.11 The following decisions of the Jury are not subject to appeal:

224.11.1 Oral penalties imposed under 223.5 and 224.2

224.11.2 Monetary fines less than CHF 1'000.-- (One Thousand Swiss Francs) for single offence and a further CHF 2'500.-- for repeated offences by the same person.

224.12 In all remaining cases, appeals are to be directed to the Appeals Commission, as per the ICR.

224.13 The Jury shall have the right to submit to the Appeals Commission recommendations for penalties in excess of monetary fines of CHF 5'000.- and suspensions beyond the event in which the offence occurred (223.4).

224.14 FIS Council shall have the right to submit to the Appeals Commission comments with respect to any written penalty decisions by the Jury.

224.15 Costs of Proceedings

Fees and cash expenses, including travel expenses (costs of the proceedings) are to be calculated comparable to costs paid to TD's and are to be paid by the offender. In the case of a reversal of Jury decisions, in whole or in part, the FIS covers all costs.

224.16 Enforcement of Monetary Fines

224.16.1 The FIS oversees the enforcement of monetary fines and the costs of proceedings. Enforcement costs are considered costs of the proceedings.

224.16.2 Any outstanding monetary fines imposed on an offender is considered a debt of the National Association to which the offender is a member.

224.17 Benefit Fund

All monetary fines are paid into the FIS Youth Promotion Fund.

224.18 These rules are not applicable to any violation of FIS Doping rules.

225 Appeals Commission

225.1 Appointments

225.1.1 The FIS Council shall appoint from the Discipline Sub-committee for Rules (or Discipline Committee if there is no Rules Sub-Committee) a Chairman and a Vice Chairman of the Appeals Commission. The Vice Chairman shall preside when the Chairman is either unavailable or is disqualified for bias and prejudice.

225.1.2 The Chairman shall appoint 3 members, which may include himself, to the Appeals Commission from the Discipline Rules Sub-Committee or Discipline Committee for each case appealed or submitted to be heard, whose decisions shall be by majority vote.

225.1.3 To avoid either actual bias and prejudice or the appearance of bias and prejudice, members appointed to an Appeals Commission shall not be members of the same National Association as the offender whose case is under appeal. In addition, members appointed to an Appeals Commission must report voluntarily to the Chairman any bias and prejudice they may hold for or against the offender. Persons who are biased and prejudiced shall be disqualified from serving on the Appeals Commission by the Chairman or, in the event the Chairman is disqualified, by the Vice Chairman.

225.2 Responsibility

225.2.1 The Appeals Commission shall only hold hearings with respect to appeals by offenders or by the FIS Council from decisions of competition juries, or matters referred to it by competition juries recommending penalties in excess of those provided for in the Sanction rules.

225.3 Procedures

225.3.1 The Appeal must be decided within 72 hours of receipt of the Appeal by the Chairman, unless all parties involved in the Appeal agree in writing to an extension of time for the hearing.

225.3.2 All appeals and responses must be submitted in writing, including any evidence the parties intend to offer in support of or in response to the Appeal.

225.3.3 The Appeals Commission shall decide on the location and format for the Appeal (phone conference, in person, e-mail exchanges). The Appeals Commission members are required to respect the confidentiality of the appeal until the decision is made public and to consult only with the other members of the panel during the deliberations.
The Chairman of the Appeals Commission may request additional evidence from any of the parties involved, providing this does not require disproportionate means.

225.3.4 The Appeals Commission shall allocate costs of the appeal pursuant to 224.15.

225.3.5 Decisions of the Appeals Commission may be announced orally at the conclusion of the deliberations or hearing should one take place. The decision, together with its reasoning, shall be submitted in writing to the FIS, which shall deliver them to the parties involved, their National Associations and all

members of the Jury whose decision was appealed. In addition, the written decision shall be available at the FIS Office.

225.4 Further Appeals

225.4.1 Decisions of the Appeals Commission may be appealed to the FIS Court in accordance with Article 52; 52.1 and 52.2 of the Statutes.

225.4.2 Appeals to the FIS Court shall be in writing and submitted to the FIS Secretary-General in accordance with the time limits prescribed in Article 52; 52.1 and 52.2 of the Statutes from the date of the publication of the Appeals Commission decision.

225.4.3 An Appeal to the Appeals Commission or to the FIS Court will not delay the implementation of any penalty decision of the Competition Jury, Appeals Commission or Council.

226 Violation of Sanctions

Where there is a violation of a sanction that has been imposed according to ICR 223 or the FIS Anti-Doping Rules, the Council may impose such further and other sanctions that it considers appropriate.
In such cases, some or all of the following sanctions may apply:

226.1 Sanctions against individuals involved:

- a written reprimand;

and/or

- a monetary fine not to exceed the sum of CHF 100'000.--

and/or

- competition suspension at the next level of sanction - for example if a three month suspension for a doping offence was imposed, a violation of the suspension will cause a two year suspension; if a two year suspension for a doping offence was imposed, a violation of the suspension will cause a lifetime suspension;

and/or

- withdrawal of accreditation from individuals involved.

226.2 Sanctions against a National Ski Association:

- withdrawal of FIS funding to the National Ski Association;

and/or

- cancellation of future FIS events in the country involved;

and/or

- withdrawal of some or all FIS membership rights, including participation in all FIS calendar competitions, voting rights at the FIS Congress, membership of FIS Committees.

2nd Section

Joint Regulations for Ski Jumping Competitions

400 Organisation

401 The Competition Committee and Officials

401.1 Members:

– the chief of competition
– the competition secretary
– the chief of hill
– the chief distance measurer
– the chief of calculations
– the chief of security
– the chief of technical facilities
– the chief of equipment
– the chief of first aid services.

Additional officials may be appointed to the Competition Committee as specific needs arise.

401.2 The Officials and their Duties

401.2.1 The Chief of Competition
is responsible for the preparation of all technical and administrative aspects of the competition. He directs, controls and monitors the work of all officials. He chairs the Team Captains' Meeting in coordination with the Technical Delegate (TD) / Race Director (RD).
He directs on assignment of the Jury the technical aspects during both official trainings and the competition.

401.2.1.1 The Competition Secretary
is responsible for all administrative and secretarial work associated with the competition. This official is in charge of preparing for other officials all forms, lists, and tables, including start lists, results lists, minutes of the team captains meeting, and informational bulletins on the competition. The competition secretary also accepts any protests arising from the competition and works as secretary of the Jury.

401.2.1.2 The Starter
is responsible to ensure that all participants start from the designated start place in the proper order and within the designated start time.
Whenever a competitor violates the rule for the starting procedure, the starter must immediately report to the Jury.
At OWG, WSC, and WSFC there is an additional start referee. He has to supervise that the starting procedure is carried out correctly and controls any infringements. He has to ensure that no unauthorised persons are present in the start area.
He has authority over the starter and his assistant.

401.2.3 *The Chief of Hill*

is responsible for the preparation of the jumping hill. He coordinates and controls the work of the chief of the inrun and the chief of the landing area. During both training and the competition he remains in continual contact with the chief of the competition and keeps him informed about hill conditions.

401.2.3.1 *The Chief of the Inrun*

is responsible for the preparation of the takeoff and the inrun.
During the competition, the chief of the inrun observes and controls the entire length of the inrun. In the case of a fall or an obstruction on the inrun, the Jury uses information from the chief of the inrun to determine whether to allow the competitor a re-jump.
On jumping hills not equipped with automatic start lights, the chief of the inrun must position an assistant at the takeoff to give the signal that the hill is clear. This assistant receives the signal to open the jump from chief of competition.

401.2.3.2 *The Chief of the Landing Area*

is responsible for preparing the landing slope and the outrun area with manual packing and grooming techniques with suitable skis (alpine skis) or mechanical equipment. This is to provide optimal conditions for the competition.

401.2.4 *Forejumpers*

- The Chief of Forejumpers
  is responsible for testing the in-run with the help of forejumpers prior to the start of the training and the competition, as well as for keeping the track clear during the event under changing conditions e.g. snowfall. The chief of forejumpers will be informed by the chief of competition how many forejumpers are required and at what time they should be prepared to jump.

- Forejumpers
  The National Ski Association of the respective competition organizer is responsible for providing qualified forejumpers that are available each official training/competition day: at least eight (8) for WC and six (6) for the other competition categories. They are not classified in the competition. However, they must be capable of starting from the gate established by the jury for the event. The minimum age limit that applies to competitors according to the rules of the corresponding competition series also applies to the forerunners. The minimum age for ski flying competitions is 18 (ICR Article 454.3).
  Forejumpers must be registered by their National Ski Association, have signed the FIS athletes' declaration, must meet all of the criteria of ICR Article 215 and must observe all ICR provisions and other FIS rules referring to competitors.
  The Jury is entitled to appoint additional forejumpers from the non-qualified competitors, but they must be registered by the respective National Ski Association according ICR Article 215.

401.2.5 *The Chief Distance Measurer*

The responsibilities of this position are as follows:

– the correct placement of the distance markings on both sides of the landing hill (art. 415.1)
– the placement of measurers according to ICR Rules and of the distance recorder (art. 404.2.1 and 404.2.2).

The chief distance measurer must supervise the efforts of distance measurers. He must arrange the measurers in such an order that the least experienced and skilled are situated above the P point of the landing hill. He must constantly oversee the reporting by measurers of the distances jumped and the communication of these distances to calculations personnel and the public announcer.
Before the competition, the chief distance measurer shall instruct distance measurers in the measuring techniques to be used.
It is mandatory for each distance measurer to be present during the training prior to the competition in order to receive the instruction of the chief distance measurer. Non-participation during this training shall bar the measurer from acting in the role as a measurer for the competition.

401.2.6 *The Chief of Calculations*
is responsible for the calculation of the results. Together with his assistants the chief of calculations is responsible for the quick collection of the basic scoring data and making a quick and correct calculation.

401.2.7 *The Chief of Security*
is responsible for ensuring that persons not involved in running the competition are kept at a safe distance from the hill so that they do not interfere with or disturb the work of the officials. Specific responsibilities include the following:
– ensuring that only authorised personnel are allowed access to the Judges tower and coaches platform
– ensuring that an appropriate area for journalists and photographers has been set up and fenced off for control
– ensuring before the competition that entrances, stands, and other facilities for competitors, officials, and spectators are properly marked, fenced off for control, and in good order
– ensuring that only authorised personnel and competitors have access to the inrun and the take off. Team officials and members of media/press are not permitted at the inrun and take off.

Giving information to the jumper on the inrun with the help of technical equipment is prohibited. Information given by the organiser is permissible.

401.2.8 *The Chief of Technical Facilities*
is responsible for the control and orderly functioning of all technical systems and devices used during the competition. This official shall ensure that the following are functioning properly:
– devices to measure and display the jumping distances, the inrun and wind velocities
– spotlight
– all systems of artificial inrun cooling
– internal telephone or radio communication lines

– the electronic-scoreboard display of start numbers, distances jumped, style points, and overall points of each participant.

401.2.9 *The Chief of Equipment*
is responsible for supplying proper equipment to the chief of competition. The chief of equipment must also work closely with the chief of competition before the competition to make sure that the proper equipment and tools will be on hand during the competition.

401.2.10 *The Chief of Medical and Rescue Service*
is responsible for the treatment of first aid for everyone at both the official training and the competition – competitors, spectators, officials, etc. This official is also responsible for establishing emergency procedures for transportation to a medical facility. Specific responsibilities include ensuring that proper medical teams and the necessary medical equipment are present during both official training and the competition. Details of the Medical Support Requirements are given in chapter 1 of the FIS Medical Guide containing Medical Rules and Guidelines.

402 The Jury and Competition Management

402.1 The Jury

402.1.1 *The Jury consists of the following members:*
– the Technical Delegate (TD)
– the Chief of the competition
– the Assistant of the TD.

402.1.2 The Duties of the Jury

The Jury must ensure that the entire competition, including the official training sessions, is organised and carried out in accordance with the Rules of the International Competition Rules (ICR).

The Jury must decide:

402.1.2.1 From which maximum inrun-length the jumpers must start.
The length of the inrun must be determined in such a way, that the jumping hill is used to its full capacity.
For the competition, the Jury is required to meet, once a jump has reached 95 % of the established Hill Size (HS) to consider whether the round of jumps is to continue. The Jury must decide whether the round in progress can be continued with the same inrun speed, or whether it must be cancelled and repeated from a lower starting gate.
If the jumps are too short, the round can be stopped, cancelled, and started over from a higher gate. In the event that the so called Wind/Gate Compensation System is in place, the in-run length can also be changed within a competition round (see art. 422.1).

402.1.2.2 In which sphere of the wind condition (velocity) the jumper is allowed to start.

402.1.2.3 The need to interrupt, postpone or cancel the competition.

402.1.2.4 About the starting order for a competitor who is either delayed arriving at the start due to „force majeure“, or concerning a re-jump for a competitor who has been obstructed.
In cases in which the Jury cannot take an immediate decision the jump or re-jump may be provisionally granted. This decision must be announced to the public.

402.1.2.5 All protests, disqualifications, sanctions and questions that occur during the competition and are not covered or not covered completely by the ICR Rules and Regulations.

402.1.3 Decisions

All decisions by the Jury must be made by open vote and a resolutions-protocol must be drawn up on all decisions which were taken. Each of the members has one vote. All the decisions of the Jury require plain/simple majority.
The members must vote (agreement or rejection, abstention is not possible) with the following exceptions:
– member is prevented from voting due to “force majeure”,

In case of a tie, the respective chairman of the Jury has the decisive vote.

402.2 The Competition Management

402.2.1 At OWG, SWC, WSFC, WCJ and GPJ competitions the Competition Management consists of the following members:

- the Race Director FIS (RD)
- the Technical Delegate (TD)
- the Chief of Competition
- the Assistant of the TD
- the Assistant of the RD
- the Equipment Controller

402.2.2 At COC and FIS Cup competitions the Competition Management consists of the following members:
- the COC/FIS Cup Coordinator
- the Technical Delegate (TD)
- the Chief of competition and
- the Assistant of the TD.

402.2.3 For University Winter Games (UWG) the competition management consists of the following members:
- the Technical Delegate,(TD) (who is the chair, appointed by FIS)
- the Chief of Competition
- the Assistant of the TD (appointed by FIS)
- the FISU Race Director (appointed by FISU)

403 FIS Officials for Jury and Competition Management

403.1 The FIS Technical Delegate (TD)

403.1.1 TDs are appointed for all Ski Jumping competitions on the FIS Calendar (nomination art. 405). The TD is responsible for ensuring that the competition is carried out in accordance with ICR Rules and with the appropriate Cup Competition Regulations. At OWG, WSC, WCSF, JWSC, WCJ-, GP- and COCJ-events the TD cannot in general be a member of the host Nation's Ski Association; however, the FIS Council may make exceptions to this rule.
The TD is obliged to uphold the decisions of the Jumping Committee and must possess a valid license at the time of appointment.

403.1.2 Requirements and Qualifications

A TD candidate must have an extensive background in support roles for officials. The TD must be able to communicate clearly in the official FIS language of English. The TD candidate's National Ski Association submits the candidate's qualifications to the Sub-Committee for Officials, Rules and Control for review. The qualification period for a new candidate is three years. When starting this qualification period, the candidate should be under 43 years of age. The Jumping Committee will grant exceptions to this rule in well-substantiated cases in which the National Ski Association files a petition for admission on behalf of the candidate.
The guidelines for TD qualifications as ratified by the FIS Council are valid for certification as a TD. Candidates for TD are not entitled to reimbursement for their expenses during the qualification period.

403.1.3 Examination and License

After completing all requirements for qualification, the candidate is granted admission to the examination. The guidelines for the FIS TD examination as ratified by the FIS Council are valid for the examination.
After passing the examination, the candidate will receive a license; this license consists of a passbook and a TD badge.

403.1.4 Further Qualification and Revocation

To retain a FIS license, a TD must participate every two years in a certification course organised by the FIS.
A TDs license will be revoked if the TD fails to work as an assigned TD for two consecutive years without justified cause. Re-appointment and certification are possible only after the FIS receives a support letter from the National Ski Association's chairman of officials and the head course instructor verifies the TDs successful participation in a FIS TD certification course. The re-appointment has to be confirmed by the Sub-Committee for Officials, Rules and Control.
Once a TD reaches the age of 65, he is automatically retired as FIS TD.

403.1.5 The Duties of the Technical Delegate

403.1.5.1 Before the Competition

The inspection points to be covered by the TD include the following:

– the organisation of the event, lodging conditions, meals, transportation, preparation for the media, and working conditions must be inspected.
– the jumping hill(s). The preparation of the hill, the agreement between the hill's actual profile and that in certificates, jumpers' safety, and measuring devices must be reviewed. The control of the measurement of lengths, widths and inclinations as well as the control of the layout, operational elements and installations as defined in the TD report.
– technical and organisational planning for the competition. The TD must assess working conditions for Judges, distance measurers, and calculation personnel; this official must also
– evaluate the communication network (telephone and radio), the coaches stand, the scoreboard display, start lights, start control, first aid services, and spectator control.
– control of all technical devices
– the competition program. Inspection must cover training times; team captains meetings, the competition schedule, doping control, equipment control, and the awards ceremony.
– Control of the passes for the Jumping Judges and the confirmation of their participation.

The TD has the authority to ask the Organising Committee for any support deemed necessary to the fulfilling of these tasks.

403.1.5.2 *During the Competition*

It is the responsibility of the TD to ensure that the competition is carried out in accordance with ICR Rules. The TD must be present throughout the entire competition and must be located in the Judges tower. It is essential that the TD has a direct communication line with the Jury, thereby making possible quick and accurate decisions by the Jury.
Whenever a problem arises that is not completely covered in ICR Rules or arises from a concern of Jury members, the TD must initiate both the discussion and the decision-making processes.

403.1.5.3 *After the Competition*

Immediately after the competition ends, the TD must do the report on all aspects of the event; the report shall consist of the designated report form and any additional comments deemed relevant. This report shall include but is not limited to a discussion of organisational preparation, preparation of the hill(s), an evaluation of the competitive event, a final results list and a complete set of minutes from all meetings and Jury decisions. The report is available online.

403.2 **FIS Race Director (RD)**

This official is nominated by the FIS for competitions of the highest category (see art. 402.2.1). The FIS Race Director must possess a TD-license for Ski Jumping.

403.2.1 The Duties of the Race Director include:
– Represents the interests of the International Ski Federation.
– Schedules and conducts inspections.

– Supervises that all aspects of the organiser contract are correctly fulfilled.
– Monitors the proper operation of the event according to the regulations and guidelines of FIS and reports to the resp. Technical Committees.
– Responsibilities for the coordination of all persons and parties involved.
– Coordination of decisions concerning postponements and replacements of an event after cancellations.

The RD has the authority to ask the organising committee for any support deemed necessary to the fulfilling of these tasks.

403.3 TD-Assistant

The TD-Assistant must possess a TD-license for Ski Jumping.
Additionally, he is responsible for the following special functions:
– Inspection of the validity of the hill certificate after arrival
– Responsible for the correct and duly preparation of the competition facility (athletes area, chairlift, warm up area, starting area, in-run, take off, landing area as well as out run area)
– Inspection of the security relevant installations (sideboards, fences)
– Connection to trainers
– Completion of the TD report form with any additional comments deemed relevant.

403.4 RD-Assistant

This official is nominated by the FIS for competitions of the highest category (see art. 402.2.1). He must possess a TD-license for Ski Jumping and will be appointed by the RD for specific tasks.
Additionally, he is responsible for the following special tasks:
– Placement of the technical systems for the in-run speed measuring and the measuring of the wind velocity.
– Control and monitoring of the technical systems.
– Coordinates and directs the starting procedure.

403.5 COC-/FIS-Cup Coordinator

This official is nominated by the FIS for COC and FIS-Cup competitions (see art. 402.2.2). The COC-/FIS-Cup Coordinator must possess a TD-license for Ski Jumping.

403.5.1 The Duties of the COC-/FIS-Cup Coordinator include:
– Represents the interests of the International Ski Federation.
– Supervises that all aspects of the organiser contract are correctly fulfilled.
– Monitors the proper operation of the event according to the regulations and guidelines of FIS and reports to the resp. technical Committees.
– Responsibilities for the coordination of all persons and parties involved.
– Coordination concerning postponements and replacements of an event after cancellations.

The COC-/FIS-Cup Coordinator has the authority to ask the organising committee for any support deemed necessary to the fulfilling of these tasks.

403.6 Equipment Controllers

These officials are nominated by FIS for Cup competitions (WC, COC, FIS Cup) (see art. 402.2.1). The Equipment Controllers must possess a TD-license for Ski Jumping.

403.6.1 The Duties of the Equipment Controller are:

- Responsibilities for the correct preparation and maintenance of the necessary equipment control devices.
- Controls the equipment, records of any infringements and makes reports to the Jury.

404 Judges and Referees

404.1 Jumping Judges

404.1.1 Jumping Judges are appointed for all competitions sanctioned on the FIS Calendar (nomination art. 405). At this level of competition, five Jumping Judges must be in attendance. These Judges must hold a current FIS license and one of them can be recognised as a candidate for Jumping Judge.
The Jumping Judge's mandate is based on the instructions and rules set out by the Sub-Committee for Officials, Rules and Controls.

404.1.2 Requirements and Qualifications

Candidates applying for certification as a Jumping Judge must have a minimum of three years of practical experience as a national-level Judge. The candidate's National Ski Association brings the relevant qualifications to the chairman of the Sub-Committee for Officials, Rules and Control. It is the responsibility of the National Ski Association's chairman of officials to indicate in written form that the candidate possesses the understanding of Ski Jumping sport necessary to qualify for a Jumping Judge's license.
The candidate's qualification period shall be a minimum of two years. During this period, it is the responsibility of the National Ski Association to provide the candidate with the necessary training and practical assignments. Candidates should be no older than 43 before the start of their qualification period. In exceptional cases, the National Ski Association may file a petition on behalf of the candidate with the Sub-Committee for Officials, Rules and Control for an exception to this rule.

After having qualified, candidates for Jumping Judge should familiarise themselves with all aspects of Ski Jumping. They must learn the following:

- the optimal aerodynamic flight positions and the sequence of movements from flight to landing and on to the outrun
- the standards for position and movement during flight, during landing, and on the outrun (art. 431)
- the point deductions for faults during flight, during landing, and on the outrun (art. 431.2).

All candidates must possess good communication skills in at least one of the official FIS languages.

Candidates for Jumping Judges are not entitled to be reimbursement for their expenses during the qualification period.

404.1.3 *Examination*

After all requirements for qualification have been completed, the National Ski Association's Obman informs the chairman of the Sub-Committee for Officials, Rules and Control of the candidate's satisfactory completion of the qualifications. At this time, the national chairman of officials also informs the FIS chairman of the candidate's assignment to an international jumping competition for the taking of the practical examination.
The candidate should be at most 45 years old at the time of the practical examination.

404.1.4 *License*

After passing the practical examination, the candidate will receive a license; this license consists of a Jumping Judges passbook and a FIS Judges badge. All assignments as a Jumping Judge and all participation in FIS courses must be recorded in the passbook.
To confirm the assignments or participation in the Jumping Judges passbook, the TD, TD-Assistant, another jury member or the responsible of the education are the only persons authorised.

404.1.5 *Further Qualification and Revocation*

All licensed Jumping Judges must participate annually in either an international or a national update/certification course.

If either of the following occurs, the Judge may no longer officiate as a Jumping Judge at international competitions:

- The Judge cannot show proof of any judging assignments or activity.
- The Judge fails to participate in a certification course for Judges for a period of two consecutive years.

Reinstatement of the Judge's FIS license is possible after successfully completing an international Judges course and receiving a written recommendation from the national Obman and from the head instructor and by the confirmation of the Sub-Committee for Officials, Rules and Control.
Once Jumping Judges reach the age of 60, they are automatically retired as Jumping Judges. However, they may continue to function as a Jumping Judge for competitions at “Continental Cup”, “FIS Cup” and “International competition”-level until 65 and in their own Ski Associations at national-level competitions.

After reaching the age of 60 a Jumping Judge may apply in writing to the respective National Ski Association for prolongation up to the age of 65 for COC and WC. The Sub-Committee for Officials, Rules and Control in coordination with the National Ski Association has to decide annually regarding this qualification.

404.1.6 *Duties*

404.1.6.1 The Jumping Judge shall follow the fundamental principle of scoring all jumps objectively as an expert. By appointing individuals as Jumping Judges, the FIS indicates its confidence that these Judges will follow rules of conduct to the best of their ability. Judges are expected to do as follows:

– prepare themselves for competitions with extensive on-hill practice throughout the skiing season
– strive to judge each jumper objectively and in an unprejudiced manner.

Jumping Judges need both constant practice and a multitude of competitive assignments on a variety of jumping hills. When judging at a competition, Judges must
– be present in the Judges compartment during training
– be familiar with all aspects of the jumping hill and be familiar with the place assigned in the Judges tower
– be familiar with the system to be used to record style points
– be in position well before the start of the trial round of competition.

404.1.6.2 The Jumping Judge must judge each jump independently from the other Jumping Judges and other persons according to the regulations of the ICR (art. 430).

He must not use or have on his person any means of communication to other persons. The Jumping Judge must enter their given points deduction personally and without assistance into the data system and/or on the style note card (start and/or result lists cannot be used as score cards). In the case of all discrepancies the deduction (score) entered by the Judge into the data system is decisive.
Within the entire length of an interval of the respective athlete discrepancies of the entries (scores) can be announced and corrected.

404.2 Distance Measuring Officials

For all Ski Jumping competitions listed in the FIS Calendar of events, the distances jumped shall be reported by distance measurers (art. 432.1 and 432.2).
Each National Ski Association participating in the event may enter one distance measurer as long as the person nominated possesses the required qualifications and performs these duties during all official training periods. Foreign distance measurers are not entitled to be reimbursement for expenses arising from their appointment by the organisers.

404.2.1 Distance Measurers
take their place on one side of the landing hill on the prepared standing positions behind the distance boards according to the measuring area assigned to them by the chief of distance measurer. If foreign distance measurers are appointed, they must be assigned to measuring areas which lie between the landing segment K-point up to Hill Size (w) and must be determined by a draw, which is supervised by the chief distance measurer.

The measuring area of a distance measurer must not exceed the following ranges:

up to 60 % of the Hill Size (HS)	5 meters;
from 60 % to 80 % HS	4 meters and
from 80 % to 100 % HS	3 meters.

Every distance measurer has the clear responsibility to watch only over the measuring area which he was assigned to, and to show the given landing

spots in his measuring area immediately and to give those to the distance recorder clearly (according to art. 432.2) regardless of the actions of the people beside him.
At OWG, SWC, WSFC, JWSC and World Cup, Grand Prix, COC and FIS Cup events video distance measuring will be used, so that the distance measurers who are positioned in the landing segment of the video distance measuring will only then go into action if there is a technical failure of the video measuring.
For this reason the measuring distance, which these distance measurers are assigned to, can be up to 10 m long, and the distance measurers have to stand higher off to the side. In addition, there must be cross-lines marked every 5 m on the landing hill.
At OWG, SWC, WSFC, WC, SGP the measuring can be done without distance measurers as long as the recording of all jumps is secured.

404.2.2 *The Distance Recorder*

The distance recorder shall be located in a suitable location on the landing hill opposite of the distance measurers but offers the distance recorder an advantageous position from which to receive reported distances. The distance recorder is responsible for the accurate recording and reporting of jumping distances indicated by the distance measurers. At the conclusion of the competition, the distance recorder must deliver the original Distance Record Chart to the competition secretary for processing and final review by calculations personnel.

405 The Nomination, Reimbursement, and Insurance of Competition Officials

405.1 Nominations

The FIS shall nominate certain officials for international Ski Jumping competitions. Jumping Judges may not be assigned to events in which a family member is participating (grandparents, parents, children, brother, sister, husband, wife)

405.1.1 Olympic Winter Games (OWG), World Ski Championships (WSC), World Ski Flying Championships (WSFC) and Junior World Ski Championships (JWSC)

For OWG, WSC, and WSFC:

– the TD
– the RD
– the TD-Assistant, 2 TD-Assistants for OWG and WSC
– the RD-Assistant
– the Equipment Control
– the Chief Distance Measurer
– six Jumping Judges.

Five at a time, the nominated Jumping Judges will officiate at the respective Ski Jumping competitions at OWG and SWC, or at the respective competition days at WSFC, taking turns based on a draw decision.

The 6th Jumping Judge of the respective competition or competition day will act as start or fall referee (Jury decision).

For JWSC:

– TD
– TD-Assistant
– the Chief Distance Measurer
– five Jumping Judges.

The nomination of all named competition officials is carried out by the FIS Council.
The Jumping Judges nominated must belong to different Ski Associations. One of the Jumping Judges should be a member of the Ski Association of the organising country.

405.1.2 *World Cup- and Grand Prix-Ski Jumping Competitions (WCJ, GPJ)*

– TD
– RD
– TD-Assistant
– RD-Assistant,
– four foreign Jumping Judges and
– one Jumping Judge of the host country.

The Sub-Committee for Officials, Rules and Control nominates the TD and TD-Assistant for the event by name and determines which four National Ski Associations may nominate one of their own qualified Jumping Judges to officiate at the event.
The National Ski Association of the host country shall nominate the remaining Jumping Judge from their own list of qualified Jumping Judges.

405.1.3 *Continental Cup Ski Jumping Competitions (COCJ)*

– the TD
– the COC Coordinator
– the TD Assistant
– one foreign Jumping Judge.

The Sub-Committee for Officials, Rules and Control nominates the TD and TD-Assistant and determines which National Ski Association may nominate one of their own qualified Jumping Judges to officiate at the event.
The National Ski Association of the host country shall nominate the four remaining Jumping Judges.

405.1.4 *FIS Cup Ski Jumping (FCJ)*

FIS nominates the FIS Cup Coordinator. The Sub-Committee for Officials, Rules and Control nominates the TD, the TD Assistant. The National Ski Association nominates the five Jumping Judges. The TD and the TD Assistant and the five Judges must possess a valid FIS license at the time of appointment.

405.1.5 *International Ski Jumping Competitions (FIS)*

The National Ski Association of the host country shall nominate the TD, the TD Assistant and the five Jumping Judges. The TD and the TD Assistant and the five Judges must possess a valid FIS license at the time of appointment

405.2 **The Nomination of Substitutes**

Whenever a competition official nominated by the FIS is unable to attend the competition and fulfil an assignment („force majeure"), the official must be replaced. For OWG, WSC, WSFC, JWSC, WCJ, GPJ and COCJ events, the substitute nomination must be confirmed by the FIS Office.

405.3 **The Reimbursement of Expenses**

The competition Organising Committee is responsible for the cost of travel and accommodation to the following amounts (bank transfer costs and eventual taxes (VAT) and costs have to be paid by the organiser):

405.3.1 *Travel Expenses*

– first class train fare,
– air fare for longer distances (economy class)
– and/or CHF 0.70 per km for travel by car (car expenses from and to the airport or rail station)
– parking costs

Prior to his travel the nominated competition official must confer with the organiser regarding the travel arrangements (train, plane or car).

405.3.2 *Daily Allowance*

CHF 100.– per day of travel to and from the event. The TD and TD Assistant get in addition during OWG, WSC, WSFC, WCJ and GPJ, COC, JWSC and, if necessary, for FCJ (see 405.4.5) competitions CHF 100.– per day for the duration of the event.

405.3.3 *Accommodation*

Free room and board in an adequate hotel at the event.
The stay at the event shall be coordinated with the Organising Committee, including both the days of official training and the days of the competition.

405.3.4 Costs for visa

The costs for obtaining visas have to be paid by the organiser. The reimbursement of costs includes travel costs to the embassy respectively consulate according the ICR art. 405.3.1 travel expenses and the visa costs on receipt.

405.4 The reimbursement of expenses mentioned above will apply to the competitions and officials listed below:

405.4.1 *OWG, WSC, and WSFC*

– the TD
– the TD-Assistant/Assistants
– the RD-Assistant
– the Chief Distance Measurer
– six Jumping Judges.

405.4.2 *JWSC*

– the TD and
– the TD-Assistant.

At JWSC, the reimbursement according to the regulations for JWSC shall apply to the following:

– the Chief Distance Measurer
– the five Jumping Judges.

405.4.3 *WCJ- and GPJ-Competitions*

– the TD
– the TD-Assistant
– the RD-Assistant
– the four foreign Jumping Judges.

405.4.4 *COCJ Competitions*

– the TD
– the TD-Assistant and
– one foreign Jumping Judge.

405.4.5 *FIS Cup (FCS) and International Ski Jumping Competitions (FIS)*

– the FIS-Cup Coordinator.
– the nominated foreign TD, TD Assistant and Jumping Judges
These officials have to be paid according to art. 405.3.2

405.4.6 *National nominations for FIS Officials at FIS Cup and International Competitions*

For the nominated TD, TD Assistant and the five Jumping Judges the National Ski Association resp. the Organiser is responsible for providing at least traveling expenses, full board and accommodation during the event according to the national rules.
TD and TD-Assistant get (except the expenses) at least one daily allowance as reimbursement.

406 The Age Classification of Competitors

406.1 The following age classifications have been established for FIS Ski Jumping competitions:

– Youth I and II
– Juniors up to 20 years of age on 1st January of the current calendar year.
– Seniors: all competitors over the age limit for juniors.

Youth I		***Youth II***
Season	*Years of birth*	*Years of birth*
2019/20	2005, 2006, 2007	2002, 2003, 2004
2020/21	2006, 2007, 2008	2003, 2004, 2005
2021/22	2007, 2008, 2009	2004, 2005, 2006

Nordic Junior World Ski Championships
A competitor must have reached his 16th birthday before the end of the calendar year (1st January – 31st December) in question.

Season	*Age*	*Years of birth*
2019/20	16-20	2000, 2001, 2002, 2003, 2004
2020/21	16-20	2001, 2002, 2003, 2004, 2005
2021/22	16-20	2002, 2003, 2004, 2005, 2006

OWG, WSC, WSFC, WC, COC and FIS Cup
A competitor must have reached his 16th birthday before the end of the calendar year (1st January – 31st December) in question:

Season	*Years of birth*
2019/20	2004 and earlier
2020/21	2005 and earlier
2021/22	2006 and earlier

406.2 In OWG, WSC, and WSFC competition, all competitors shall start in one category. For JWSC competition, the age regulations are as in art. 406.1.

406.3 For all other international Ski Jumping competitions, separate age groups may be established. The entry form must advise participants what the various age groups will be.

406.4 Junior competitors may start in the Senior classification provided their National Ski Association has entered their name in that category. However, Juniors wishing to start in this category must have the skills to compete in that class.

410 The Jumping Hill

411 Standards for the Construction of Jumping Hills

411.1 Classification of the Jumping Hills according to sizes.

The class of the hill will be determined by the distance of the L-point (HS): Hills are classified by sizes as follows:

Description	**Width HS**	**Respective Width w**
Small hills	to 49 m	to 44 m
Medium hills	50 m to 84 m	45 m to 74 m
Normal hills	85 m to 109 m	75 m to 99 m
Large hills	110 m and larger	100 m and larger
Flying hills	185 m and larger	170 m and larger

Large hills for which the height difference between the lowest point in the outrun and the edge of the takeoff exceeds 88 m will not be homologated by the FIS.
Whenever new twin-hill construction is to take place, the difference between the distances at HS on the normal and large hill should be a minimum of 25 meters.

411.2 The Geometrical Elements for the Jumping Hill (Fig. 1)

Inrun

A	highest start place
B	lowest start place
E_1	the beginning of the radius curve
E_2	the end of the curve, the beginning of the takeoff
T	the edge of the takeoff
e_1	the length of the inrun from the highest start place to the edge of the takeoff table
e_2	the length of the inrun from the lowest start place to the edge of the takeoff table
e_s	the length of the starting place area
t	the length of the takeoff
γ	the gradient of the straight section of the inrun
α	the gradient of the takeoff
r_1	the radius of the curve of the inrun at point E_2

Profile of Landing Area

T	the edge of the takeoff of the hill (=coordinate origin)
s	the height of the takeoff
P	the beginning of the landing area
K	construction point
L	the end of the landing area
U	the start of the outrun area, lowest point of the profile
HS	the measured distance (Hill Size) from the edge to the takeoff to the end of the landing area L
w	distance between the edge of the takeoff and the construction point K, measured according to ICR art. 415.1
h	the height difference from the edge of the takeoff to the K point
n	the horizontal distance from the edge of the takeoff to the K point
z_U	the height difference from the edge of the takeoff to the lowest point U
l_1	the length of the curve P-K
l_2	the length of the curve K-L
l	the length of the curve of the landing area P-L
a	the length of the outrun
β_o	the tangent angle of the landing hill knoll at the base of the takeoff
β_P	the tangent angle at P point
β	the tangent angle at K point
β_L	the tangent angle at L
r_L	the landing hill radius P-L
r_{2L}	the radius curve at L
r_2	the radius curve at U
b_1	the clear width of the inrun
b_2	width at the base of the takeoff
b_k	the prepared width at the K point
b_u	the prepared width at the end of the r_2 radius and the start of the outrun

Fig. 1

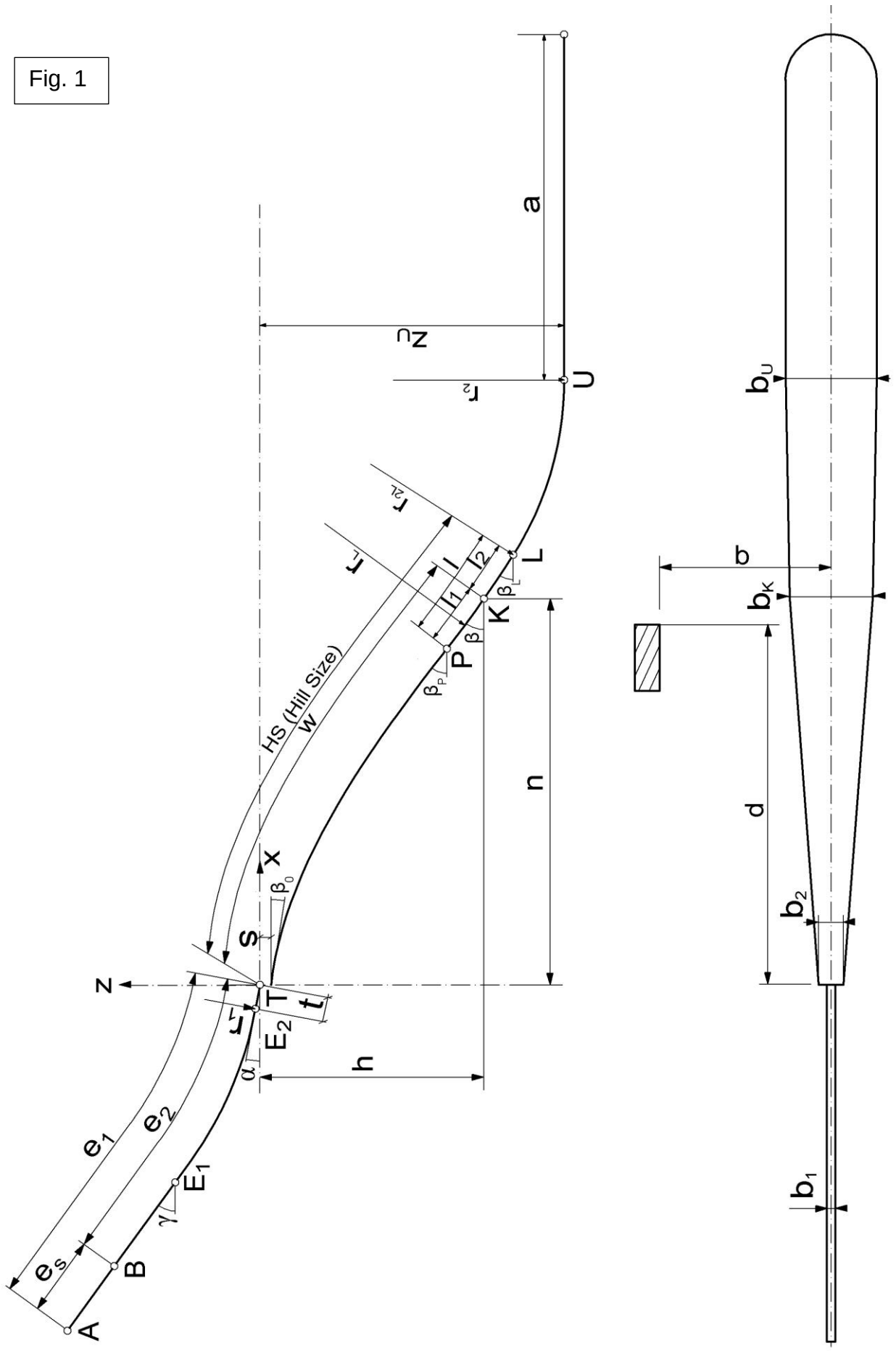

411.3 **Description of the Side Profile**

411.3.1 *The Inrun*

The inrun is composed of a straight section with γ gradient, followed by a curve with a bend rising from 0 to the end of the curve with the radius r_1 at the beginning of the takeoff and a straight takeoff table with length t and gradient α. Starting places must be set above area e_s with the same distance between them.

411.3.2 *Landing Hill Profile*

The landing hill profile shall consist of the following components: starting from the bottom of the takeoff, the entire landing hill, the transition curves and the outrun area.

411.3.2.1 The knoll area of the landing hill begins at the bottom of the takeoff with a height of s, below the edge of the takeoff, with inclination β_o and ends at the P-point with inclination β_p. The preparation of the landing hill profile under the jumper's take off (knoll) must provide good landing conditions for short jumps and an optimum flight curve for the long jumps.

411.3.2.2 The landing area from P to L is of a circular shape which is determined by the radius r_L. This radius starts at the P point with the tangent angle β_p. At the K point and at L the tangent angles are β and β_L.

411.3.2.3 The curve from landing hill to outrun can be either clothoid or circular.

411.3.2.4 The outrun shall provide enough area for slowing and stopping. It must have a horizontal cross-section contour. The length profile can have an inclination or bend(s).

411.4 The following jumping hill requirements are essential and must be complied with when preparing a hill for competition.

The relationship value between the written speed velocities v_0 in m/s (= km/h: 3.6) and lengths in m.

t	=	0.25 v_0	(guiding value)
s	=	0.025 w, at least 0.70 m	(guiding value)

The clear width between the guard rails at the inrun is at least:

b_1	=	1.5 m	for w < 30 m
b_1	=	1.0 m + w/60	for 30 m ≤w ≤ 74 m
b_1	=	1.5 m + w/100	for 85 m ≤ w ≤99 m
b_1	=	2.50 m	for w >100 m

to maximum of 25 cm more than these values.

Minimum width of the prepared areas of the Landing area and Outrun:

b_2	=	0.06 w, with a minimum of 3 m
b_K	=	0.20 w, with a minimum of 6 m
b_A	=	0.22 w, with a minimum of 6.5 m.

411.5 Construction Requirements for the Jumping Hill that Serve the Elements of Competition and Safety

411.5.1 *The Inrun*

The jumping hill inrun is designed to provide the necessary speed v_0 at which a maximum jumping distance for the hill can be reached. The layout of the starting gates shall be equal in their distance apart and with a maximum height difference between each starting place not exceeding 0.40 m. In addition, the starting gates shall be numbered so that the lowest starting gate is designated as start gate number 1.

The prepared snow surface of the inrun must equal the designed snow depth of the profile boards. To the outside of the profile boards, a guard rail of minimum 0.5 m in height is to be constructed. The minimal placement of the guardrails shall be from the start till 1m from the edge of takeoff. The distance between guardrails and prepared b_1 width should not exceed an additional 25 cm in overall width.

~~Within the prepared guardrail section, no protrusions (screw heads/irregular shape parts, and/or gaps may exist of any size; with the exception of: timing equipment).~~ Within the prepared guardrail section there must exist no protrusions (sharp-edged screw heads / irregular shape parts). As well only gaps and openings with a maximum width of 15 mm are allowed (exception: timing equipment). The first guardrail section of the starting gate shall be placed at an outward angle with a rounded corner edge. The top edge of the guardrail material must be rounded and smooth along the entire length of the inrun on all panels. All constructions that extend past the end of the take-off must be covered with a stable, secured, soft material.

411.5.2 *The Landing Area*

From the bottom of the take-off, the entire designed width of the landing slope must be prepared with snow. No obstacles are allowed in the prepared area and movable devices must be removed when the hill is in use.

Placement of guardrails on both sides of the landing area is required for the safety of a fallen jumper or stopping of a runaway ski. Guardrails shall be minimum 70 cm high above the prepared snow profile of the landing. Placement of guardrails on the landing shall start from 0.1 w to the end of the transition curve. The upper end of guardrails must run into the slope horizontally. ~~From the end of the transition curve to the exit gate and around the entire outrun area the height of the guardrail shall be 1 meter above the prepared snow profile.~~ Within the prepared guardrail section no protrusions (sharp-edged screw heads / irregular shape parts) are allowed, which may endanger an athlete. As well only gaps and openings with a maximum width of 15 mm may exist. The snow profile height as well as the distance markers (paddles) should be marked on the guardrails. In addition, the guardrails must be parallel to the landing slope profile.

The landing area within the guardrails must be free and clear of any obstructions that could endanger a fallen jumper.

The upper edges of all guard rails must be rounded. Guardrails must be set up in such a way that a stray ski of a fallen jumper cannot go through.

Guardrails constructed in concrete have to be padded with minimum 3 cm permanent soft material on the inside of the landing area.

411.5.3 The Outrun

Guardrails with a height of at least 1 m above the snow profile must be mounted away from U around the entire outrun area until the exit gate~~.~~ in a stable manner, so that they are able to fulfil the function of guardrails for fallen athletes and loosened skis. Guardrails must be constructed in accordance with art. 411.5.2 “The Landing Area”. Temporary solutions are possible and must be constructed in accordance with art. 411.5.2 “The Landing Area”.

411.5.4 The Judges Tower

The five judging compartments shall be separated by solid partitions and have a minimum size of 1.0 m width and 1.2 m depth. It is recommended that the compartments shall ascend upward towards the takeoff and according to the flight trajectory path of the jumper. The height difference between the window sill and compartment floor should be 1.0 m. The compartment walls shall be constructed in a way that prevents a Judge from viewing the given score of the other Judges. The compartment for the chief of competition as well as other competition officials must be constructed in such a way that it eliminates mutual distractions and interference with the Judges abilities to execute their duties.

When two jumps share a common outrun it is not necessary to have two Judges towers when the height difference of the K point of the two hills does not exceed 3 m. The Judges tower must be positioned on the side of the smaller of the two jumping hills. The placement of the tower and judging compartments shall be calculated on the horizontal distance from takeoff and the height norms for the larger hill.

411.5.5 The Coaches Stand

For jumping hill facilities, where international competitions are to be organised, coaches must have two suitable stands (for 20 persons each). One stand should be in the area near the edge of the takeoff and the second should have an unobstructed view of the portion of the jumpers flight and the landing.

For OWG, WSC and WCS events, coaches’ stands for 40 coaches must be available.

411.5.6 The Ski Jumping Hill Infrastructures

For OWG, WSC, WSFC, JWSC and WCJ competitions, the infrastructure requirements are regulated in the FIS matrix, available in the document library of the FIS Website.

412 Jumping Hills with Plastic Covering

The Sub-Committee for Jumping Hills sets forth the restrictive norms for constructing a hill with plastic covering, especially for required areas for covering and basic inrun, landing area and outrun constructions. These norms are based on the latest technology and they are available in the document library of the FIS Website. They also include projects for planning and application forms for homologation of jumping hills with plastic covering.

413 Ski Flying Hills

Particular rules apply to Ski Flying hills. The new building or reconstruction of any current Ski Flying hill may be started only after plans have been approved by the FIS. The following restrictions and requirements must also be met:

- h:n must be at least 0.60.
- The maximum value of V_0 is 30 m/s.
- The height difference between the edge of the takeoff platform and the end of landing area (= U-point; = end of the radius r_2) shall be ≤ 135 m beginning from U there may be added a radius or transition curve with maximum inclination of tangent in U of 5°.
- The width of the landing slope at K (b_k) must be $b_k \geq 0{,}18$ w
- The width at the end of the r_2 radius and the start of the outrun at U-point b_u must be ≥ 0,20 w

In addition on the edge of the take-off platform, on both sides outside of the landing area guardrails, the exact snow profile height of the K-point, the HS distance and the U-point, have to be marked. This marking has to be fixed with concrete material. These marks have to correspond and reflect the given marks on the hill certificate.

414 The Approval of Jumping Hills

Jumping competitions listed in the FIS Calendar may be carried out only on jumping hills with current FIS approval and an official hill certificate.
The Sub-Committee for Jumping Hills provides certificates for normal, large, and Ski Flying hills.
Small and medium jumping hills must be homologated by National Ski Associations if no international competitions are to be arranged. Standards of National Ski Associations for small and medium size hills can deviate from FIS standards.
The new standards are valid for jumping hills that will be built or reconstructed after 1st January 2009. Certificates for jumping hills awarded by the FIS before 1st January 2009 on the basis of the pre-existing construction standards are still valid.

414.1 New or Reconstructed Jumping Hills

414.1.1 Before the start of hill construction, the owners of the jump hill must submit their plans to the hosting National Ski Association. The plans are then submitted for approval to the chairman of the Sub-Committee of Jumping Hills Hills as well as to the Jumping Committee for confirmation of logistical and organisational aspects. This process shall be done for both new and reconstructed jumping hills. It is a submission requirement to submit 3 copies of the plans and dwx-/dxf-files, 1:500 scale, including both profile and aerial view of the proposed jumping hill.

In addition to the construction plans, the submitted plan must include a certified meteorological survey by a state certified agency, institute or business. The survey shall provide data on both the snow and the wind conditions of the proposed site. The report information shall be taken at the following site placement.

Accurate wind data shall be measured and recorded at the site plan location between the takeoff of the jump and the landing hill area. The time period to be recorded is from the beginning of December to the end of March. Wind data to be measured shall be both wind direction and wind velocity. The wind velocity shall be measured in m/s.

In general, site selection, planning, and jump complex design should maintain, respect, and comply with both conservation and environmental ideals.

414.1.2 The certificate for Jumping Hills which are intended to be used for international competitions can only be granted if all requirements and measures demanded by the Jumping Committee~~, given under Art. 414.1.4,~~ are kept.

414.1.3 The chairman of the Sub-Committee for Jumping Hills is authorised to grant preliminary construction permission if FIS standards for jumping hills (art. 411) are completely met and the meteorological report is complete and positive. The chairman will then inform the other members of the Sub-Committee for Jumping Hills of these actions and add the application to the agenda for discussion and final approval at the Sub-Committee's next meeting.

414.1.4 Whenever applications do not meet FIS standards for the construction of jumping hills (art. 411), the Sub-Committee for Jumping Hills must decide whether to grant permission for the construction of the hill during one of its upcoming meetings.

The Sub-Committee for Jumping Hills may grant permission for deviations from FIS standards for the construction of jumping hills if convincing reasons for the deviation are firmly supported and jumpers' safety can be guaranteed through the trouble-free sport-technical performance of the jumps.

414.2 The Homologation of Jumping Hills

414.2.1 After completing construction, renovation, or correction to a jumping hill, the National Ski Association is responsible for applying for the homologation of that jumping hill to the Chairman of the Sub-Committee for Jumping Hills. The application must include 3 copies of the profile and vertical views to the scale of 1:500 and dwg-/dxf-files. For the homologation, the correctness of the plans must be verified by an authorised professional survey agency.
The chairman of the Sub-Committee for Jumping Hills appoints a member of his Sub-Committee to inspect the facility. If the facility conforms to the Ski Jumping hill rules and special rules (art. 412), the chairman of the Sub-Committee will award the certificate

414.2.2 For all jumping hills with plastic mats, meant to host international competitions, a second profile certificate is required. The special plastic hill certificate must be displayed next to the original hill certificate. The hill owner must apply for an approval for the plastic covering. ~~The chairman of the Sub-Committee for Jumping Hills appoints a member of his Sub-Committee to inspect the facility. If the facility conforms to the Ski Jumping hill rules and special rules (art. 412), the chairman of the Sub-Committee will award the certificate.~~

414.2.3 After the plans have been reviewed, the Chairman of the Sub-Committee for Jumping Hills shall personally work out the hill certificate for hill profiles that are in agreement with FIS construction standards.

In the case of profiles with deviations from FIS standards, the chairman must decide

- whether to grant conditional permission that enforces the necessary changes through a process of review, control, and responsibility by the proposed hill's National Ski Association
- whether further review and inspection by a certified hill inspector is necessary
- whether an exceptional permission should be reviewed (art. 414.1.~~3~~4).

414.2.4 The Sub-Committee for Jumping Hills may decide during one of its regular meeting on the homologations of Flying Hills after renovations or corrections to profiles have occurred. The decisions of the Committee will be based on the verified application, profile sketches, and profile measurements submitted to the chairman. The final inspection of Flying Hills will be done by an appointed inspector and a foreign surveyor appointed by the resp. inspector.

414.2.5 Hill certificates are valid for five years. An application for additional extension is needed after five years. When no changes or renovations have occurred in the hill profile, the new certificate will show the number of the previous hill certificate with the addition of the first, second, etc., extension.

When profiles have been corrected and renovations have occurred, the new certificate will show the number of the previous hill certificate, and first, second, etc., corrections will be marked.
For renewal of the plastic covering certificate, a report is required from the inspector nominated by the chairman of the Sub-Committee for Jumping Hills. A renewal of the certificate can be given when experience from previous years shows that safety and security of the jumpers conforms to the rules.

The Sub-Committee for Jumping Hills will annually publish a list of all FIS-homologated jumping hills.

414.3 Inspection Reports and the Distribution of Documents

Following a proposal by its chairman, the Sub-Committee for Jumping Hills will commission a hill inspector to check jumping hills scheduled for construction, renovation, and corrections to the profile(art. 414.2.1 und 414.2.5).
These inspection reports shall be filed in one of the official FIS languages and in written form. Immediately after each inspection, two copies of the report must be sent to the chairman of the Sub-Committee for Jumping Hills.

The chairman of the Sub-Committee for Jumping Hills shall ensure that the certified hill profiles (profile and vertical view sketches to the scale of 1:500) and the certificates are distributed to the following:

- the owners of the jumping hill
- the National Ski Association
- the Sub-Committee file for hill construction.

414.4 Charges and Compensation

For the verification, approval of hill profiles and homologation of jumping hills and jumping hills with plastic mats will be charged for as follows:

414.4.1 Charges and compensations for Jumping Hills

- approval of hill profile(s) and hills with plastic mats for construction or renovation: CHF 250.--
- verification of hill profile(s) for new and rebuildings before start of construction: CHF 100.–
- the issuing of hill certificates for initial applications, extensions or corrections to profiles: CHF 150.—

414.4.2 Charges and compensations for Flying Hills

- approval of hill profile(s) for construction or renovation CHF 500.--
- verification of hill profile(s) for new and rebuildings before start of construction: CHF 200.--
- the issuing of hill certificates for initial applications, extensions or corrections to profiles CHF 300.--

At the time of application, equivalent amounts must be transferred to the FIS bank account.
All other expenses incurred by the preparation of new plans or costs for hill inspectors must be covered by the hill owner. Allowances for hill inspectors equal those for TD (art. 405.4).

415 Measuring Devices

415.1 Jumping Distances

Distance markings shall be put on both sides of the landing from the distance of 0.5 w down to 5 m below the point L (HS). Specific rules for Ski Flying hills are determined by the respective jury To correctly put the distance markings, take a measuring tape, and measure from the two extreme sides of the takeoff edge down the landing slope to the point that is 50% of the K point (rounded up to a full m). At this measured point, put the appropriate distance marking on both left and right sides of the landing slope. Measure along the slope in 1 m intervals to mark the location of the other distance markings.
For the measuring of the distances with a technical system (technical distance measuring), the approval of the Jumping Committee is required for its operational validity.

415.2 Inrun Speed

The devices for the measurement of inrun velocity v_0 shall be placed as follows:

- The measured distance of the photocell beam is 8 m.
- The second photocell beam must be located 10 m before the edge of the takeoff.
- The photocell beam must be 0.2 m above the snow profile.

For jumping hills listed on the FIS competition calendar HS 85 m and larger, inrun velocities must be measured during all training periods and throughout competition.

415.3 Wind Velocity and Direction

The wind measuring instruments must be placed alongside the landing slope at the height of the optimal flight trajectory. The measurement data for these devices must be available to competition officials in the judges' tower and shown in the most consolidated, readable form possible. Measuring instruments must be placed in three locations on normal, large and Ski Flying hills (at the edge of the takeoff as well as at approximately 50% and approximately 100% of the distance to the K-Point). In addition, at least 8 wind flags or wind socks must be placed along each side of the landing hill at the height of the flight trajectory.
The Jury can change the locations of some of these devices if specific conditions on the hill require it.

If the wind/gate application is used there are special rules relating to the fixation of wind measuring devices

415.4 Start Permission and Start Time Control

415.4.1 Three phase mode

Start permission and starting time control at OWG, WSC, WSFC, JWSC as well as WCJ-, GPJ- and COCJ-events will be determined by means of a three-coloured (red-Yellow-green) stoplight and a digital clock which are connected and running automatically depending on the adjustable starting rhythm program.

During the red phase (start preparation) the clock runs backward from the adjusted time to zero seconds. The red phase is for the direction of the competition and can be stopped whenever needed. During the consecutive yellow phase the clock runs forward. The competitor is allowed to take the position on the starting bar with the begin of the yellow phase. According to the external conditions the Jury decides about the minimal duration of the yellow phase (usually between 10 and 15 seconds). The duration of the yellow phase can be between 10 and 45 seconds. If the conditions do not allow to start the competitor, the yellow phase switches to red automatically. In this case the competitor must leave the starting bar and prepare for the new starting procedure. The yellow phase switches to the green phase after 10 seconds at the earliest.
With the switching to green light, the starting time begins and will be finished after 10 seconds. Within these 10 seconds the competitor must start and leave the starting bar. The light automatically switches back to red and the starting procedure for the next jumper begins.
The times for yellow and red phase must be clearly visible to the athletes on the separate display on the starting semaphore.

415.4.2 Two phase mode

The start permission and the start time control for other FIS events must be done with an automatically controlled light signal (traffic light). The light shall

be a steady green for 5 seconds, a flashing green for a minimum of 5 seconds up to a maximum of 10 seconds.
After the entire start time period of a minimum of 10 seconds up to a maximum of 15 seconds, a red light thereafter. The established start time period must be clearly visible to the athletes. The countdown of starting time may also be shown by an automatically directed clock.
The chief of competition, an assigned assistant or a Jury member is responsible for controlling the start-time device.

To ensure a correct starting procedure, further technical measures may be used (e.g. order to take the start position through visual or an audible signal), which have special regulations established by the Jumping Committee. This modus can also be used at COCJ-events.

415.5 Lengths, Angles, and Temperatures

The following measuring devices and instruments must be available on site for the TD-Assistant at all times:

- a 50 m measuring tape
- a hydrostatic balance (digital level)
- a balance bar
- a goniom
- a thermometer
- a metric tape measure (minimum 3 m).

These measuring devices will allow the TD to review the actual and current snow profile, snow temperature, and air temperature.

416 Information for Spectators and Facilities for Media Representatives

416.1 Information for Spectators

In addition to receiving information via the loudspeaker system, competitors and spectators should be informed by scoreboards. The scoreboard shall display the competitor's start number, the distance jumped, the style score given by each Judge, the total point score, and current place in the competition.
The scores of the five Judges must be published at the same time.

416.2 Stands for Media Representatives

Optimal working conditions and places shall be provided for representatives from television, radio, newspapers, periodicals, and photography agencies. These conditions shall include continuous information (start lists, current positions and changes of ranking), access to optimal viewing positions, and an assigned area equipped with trouble-free technical devices to facilitate the performance of their duties.
The use of flashbulbs or other lighting devices is prohibited during the jumping competition, for these devices can interrupt and disturb jumpers and their movements.

417 Snow Preparation

Before the start of training and through the entire competition period, the hill - from the start point at the top of the inrun to the end of the outrun - must be prepared in exact accordance with requirements.

417.1 Requirements for the Inrun and Takeoff

The preparation of the snow must be such that it is completely level and at the exact height of the profile boards. This profile should allow a snow depth of minimally 20 cm. The necessary snow density is achieved through packing.
The tracks must be prepared with the help of technical equipment (a track cutter, track plane or inserted profile boards or something similar) according to the following measurements:

- Distance between both centres of tracks for Jumping hills with w over 75 m: 30 – 33 cm
- Width of track: 13.0 – 13.5 cm
- Depth of track: at least 3 cm for normal, large and flying hills.

The following regulations are valid for OWG, WSC, SFWC, JWSC and WCS events:

- In winter, the in-run tracks must be prepared with artificial snow, ice or in exceptional cases artificial material (i.e. china).
- The in-run tracks prepared with artificial snow or ice have to be supported by a cooling system. The tracks have to be made by track cutters.
- It has to be assured that surface water caused by rain or warm weather can be drained from the track.

The preparation of the inrun and takeoff must provide all competitors with the same conditions throughout each competition round. If it is necessary to change or prepare the inrun during the competition because of snowfall, falls, or long holds, there must be a sufficient number of trial jumps before the competition can continue. In the case of poor and hazardous conditions, the Jury will base its decision on the performance of the forejumpers and the effects of the weather on them.

If the length or inclination of the takeoff is changed during one official round of competition, the round must be cancelled and restarted. It is the Jury's responsibility to decide at the conclusion of a day of jumping whether the inrun track shall be left in or taken out and the inrun prepared anew.

417.2 Requirements for the Landing Slope and Outrun

The snow must be prepared so that it possesses the necessary density and firmness. The snow depth must be minimal 30cm (35cm for the hills with plastic covering).
For sites hosting OWG, WSC, WSFC, JWSC and WC competitions, it is mandatory that the preparation, grooming and packing of snow can be accomplished through the use of an appropriate on-site snow grooming machine. Chemicals may be used to ensure that the necessary firmness can be achieved. The prepared snow surface shall be completely level and concur with the planned (designed) snow profile. This requirement is

extremely important for the area from the first distance paddle to U (end of transition curve).

417.3 The Marking of the Landing Hill

The Hill Size (HS) has to be marked on the landing hill by a crossline of spruce twigs or equivalent. This crossline should be marked with red ink colour at each side of the landing slope for a distance of appr. 5 meters. Furthermore, on both sides of the landing slope it is recommended that banners with different colours shall be laid down as follows:

- between the construction point (K) and the Hill Size (HS) a red banner on each side;
- from the K-point towards the P-point a blue banner on each side in an equivalent length of the distance between K and HS, as well as
- from the fall line towards the HS a green banner on each side in an equivalent length of the distance between K and HS.

For the orientation of the measurers, Jumping Judges and spectators regarding distances reached and for calibrating the video-distance measuring, crosslines also have to be placed on the landing slope from 10 m before P-point to the Hill Size (HS) for the Jumping lengths at intervals of five m (e.g. 60 m, 65 m, 70 m, 75 m ...). If needed, the Jury is entitled to add additional markings.
At World Cup competitions the “to beat line” is also part of the hill marking.

417.4 The Fall Line

It is the responsibility of the Jury to define the placement of the fall line on the outrun. After this decision has been reached, a crossline shall be marked with either a painted line or spruce twigs. As a rule, the fall line shall be located at the lowest point of the r_2.

420 The Administration of the Competition

421 Entries, Draws, and the Admission of Reserves

421.1 Homogeneous rules apply to the entry of athletes by name for FIS ski competitions (art. 215).

421.2 The draw for the starting order shall take place according to the regulations for the accomplishment of competitions (championships on normal or large hills, art. 451; individual competitions on normal or large hills, art. 452; team competitions, art. 453; and Ski Flying competitions, art. 454).

421.3 At Ski Jumping competitions where the participating nations (clubs) are allowed to enter only a limited number of competitors, a reserve may be substituted for a nonstarting competitor.
The Jury is responsible for determining the eligibility and admission of the reserve to be entered.

422 The Competition

422.1 In-Run Length

The Jury shall decide the length of in-run (starting place) to be used. No competitor is allowed, to use a longer inrun, than decided by the Jury.

If the so called Wind/Gate Compensation System is in place the Jury may change the length of the in-run even during a competition round in order to approach the principles of fairness and safety. The Wind and Gate Compensation Factor will be included in the total score.

A Trainer/Coach is entitled to reduce the length of in-run for his respective athlete. This has to be announced within the red phase of the starting procedure of the athlete concerned (does only apply for WC competitions). In such a case, the gate compensation factor is only calculated, if the athlete jumps at least 95 % of the HS distance.

422.2 The jumper is not allowed to use ski poles or any other kind of assistance. Nor is the jumper allowed to obtain outside assistance. It is mandatory for the competitor to wear his start number during all rounds (training, qualification and competition).Competitors who violate this ruling will be disqualified.

422.3 When the hill is clear and the officials are ready, the chief of competition or an authorised and instructed assistant from the Jury shall give the start signal from the Judges tower for each competitor. No more than one signal should be used to initiate the exact time of the start control.

422.4 The start signal shall be determined by a green light displayed on the traffic light. If such a starting device is not available, the jumper can be signalled that the hill is clear by the waving of a flag by a control official located on the takeoff platform.

422.5 The jumper must have completely finished the jump before the next starting signal may be given.

422.6 It is the responsibility of the chief of competition to coordinate communication among the chief of hill and this official's various assistants at the takeoff, on the outrun, and at the wind-measuring devices that the hill is clear, that all officials are ready, and that weather (wind) conditions are fair.

422.7 The starter shall report to the chief of competition the number of the upcoming jumper and the competitor's readiness to start.

422.8 It is the competitor's responsibility to be ready at the start when the starting number is called. The Jumper has according to the respective mode of the start time installation (10 seconds in case of three phase mode and 10 – 15 seconds in case of two phase mode) to leave the start after the start signal has been given. If the jumper has not left the start gate by the end of the start time, the hill will automatically be closed (see art. 415.4).

422.9 During the starting procedure the jumper must have the opportunity to clearly observe the automatic countdown display (e.g. a programmable digital clock) (art. 415.4).

422.10 The Jumper has to start within the start time. If the start signal is interrupted during the competitor's starting period for any reason, for example unstable weather conditions, the starting process will begin again.

422.11 The jumper must not start before the official starting signal or intentionally delay readiness to receive signals from a third person. Feigning problems with skis, bindings, equipment, or clothing is inexcusable. Both types of actions will as a rule cause disqualification.

422.12 A competitor hindered by «force majeure» who arrives late at the start may appeal to the Jury. After considering all the facts reported, the Jury may allow the competitor to participate in the remaining part of the competition out of starting order.

422.13 If possible, style points shall be displayed after each competitor's jump (open scoring). An acoustic announcement concerning style points awarded is not permitted.

422.14 **95 % Rule**
A jumper, who has reached 95 % of the maximum length of the longest jump but has a fall, has the right to participate in the next round in addition to the qualified jumpers (if the wind/gate compensation is used, the compensated distance is the basis).

423 The Repetition of a Jump

A competitor hindered or interfered with during the jump by an error on the part of an official, an animal, spectators or any other «force majeure» may appeal to the Jury. After considering the facts reported, the Jury shall either allow or reject a repeat of the jump. In case of one of the above mentioned reasons, the Jury is entitled to allow repetition of the jump from their own point of view.

424 Training on the Jumping Hill before the Competition

424.1 The training on the competition jumping hill before the competition (official training) is in the schedule assigned to the organisation and under the responsibility of the Jury.
Any additional training under self-responsibility and direction of the trainer (free training) during the scheduled organisation days is not permissible.

424.2 At the official training for the competition only the registered competitors as well as the additional fore jumpers specified by the Competition Committee can participate.
At the OWG, WSC, WSFC JWSC and Cup competitions the right to participate at the official training is based on the actual rules and regulations.

424.3 Each official training sessions is carried out according to a starting order determined by the Jury and each competitor shall wear a start number. For OWG, WSC, WSFC, JWSC and Cup competitions special regulations will be applied.

424.4 For FIS International competitions, the jumping hill must be available for training a minimum of one day. For the OWG and the WSC, the jumping hill must be available for training three days before the competition. The Competition Committee shall consider both snow and weather conditions when scheduling training sessions. It is the responsibility of the Competition Committee to provide optimal training conditions for all competitors.
The TD has to give advice and support the Competition Committee in these questions.

424.5 If possible, training sessions shall be scheduled at the same time of day as the competition. All information pertaining to the training schedule or possible changes must be presented in due time.

424.6 The jumping hill must be in good condition for all training sessions and must be prepared as it would be for the competition. An adequate number of officials and hill packers must be present during the training sessions.

424.7 During all training sessions, distances shall be supervised and the maximum length of inrun decided and fixed by the Jury.

424.8 Working and observation positions shall be assigned to the Jumping Judges and coaches during all training sessions.

424.9 On-site first-aid personnel must be present during all training sessions to provide any necessary medical assistance. Details of the Medical Support Requirements are given in chapter 1 of the FIS Medical Guide containing Medical Rules and Guidelines.

430 The Judging of the Ski Jump

The overall result in jumping consists of the distance jumped and the style points achieved. Distance points are related to the K point, which also serves as the table point. A jumper reaching the K point receives 60 points. Style points may reach a maximum of 60 points.

431 The Judging of the Ski Jump Performance

431.1 Principles

The Judges must judge the outer appearance of the succession of the jumpers movements, from the end of the take off to the passing of the „fall line“ in the outrun, from the aspect of precision (timing), perfection (carrying out of the movements), stability (flight-position, outrun) and general impression.

The calculated points that should be given for the ideal performance of the jump are concerned with the

– utilisation of the aerodynamic efficiency of body and ski
– posture of arms and legs, as well as ski position during flight
– succession of movements during landing and
– conduct during outrun.

Also, flight, landing and outrun should convey an aesthetic overall impression. The point deduction for faults and deficiencies must be carried out according to the three groups of appearance of the successions of the jumpers movements: flight, landing and outrun. The judges have to submit their point deductions separately according to the three groups; flight, landing and outrun to calculations (computer and/or calculation office).

431.2 Standards for Position and Movement

431.2.1 The Flight

Jumpers must raise their flight trajectory by moving as follows:

- making a bold and aggressive move at takeoff
- proceeding rapidly and smoothly to achieve an optimal flight position
- and initiating preparations for landing at the right moment.

Judging criteria's

- Actively utilisation of the air pressure
- Combination of body and ski to build an entire flying system
- Getting into a optimal and stable body position with left and right sides symmetrically positioned skis, legs and arms.
- The legs have to be fully stretched

Point deductions:

- Maximum point deduction for the entire group of faults 5.0 pts

431.2.2 Landing

The jumper must

- come from a stable flight position
  raises head and upper body
  moves the arms on the sides forwards/upwards and
  turns the skis into a parallel position
- just before touching ground with the end of the skis
  splitting the legs and
  bending the knees
- after touching ground by utilising the own muscle power to reduce the landing impact to obtain a smooth landing
- and at the same time
  increase the distance between the legs and bend the back leg even more (telemark position)
  with the skis parallel and obtain the pressure equal on both legs
  to obtain stability stretch both arms horizontally and forwards upwards

Judging criteria's

- A smooth movement from the flight position to landing by straightening the upper body
- split legs and bend knees when touching ground
- take an active part to obtain the impact from landing to reduce speed
- by correct bended knees to obtain a smooth landing (not to deep and not to long)

– positioning the legs in correct telemark position after having obtained the landing impact e.g. separation between feet should be approx. the length of a foot, at least a separation has to be evaluated at the moment of touching ground and in this case the separation has to be expanded during the landing impact.
– skis parallel with distance not more than two ski widths and equal pressure on both skis and on their total surface

Point Deductions:

– Maximum point deduction for landing	5.0 pts
– No telemark landing (feet parallel) at the end of the landing phase (as a single fault) minimum	2.0 pts

431.2.3 *Outrun*

The jumper must:

– After obtaining the landing impact with the correct leg position and bending knees, remain in this telemark position and then rise the upper body and
– Pass through the transition curve and pass the fall line in a higher but stable and relaxed body position with skis parallel or with skis in snowplough position.

Judging criteria's

– After landing a short period of time remaining in a stable telemark position (approx. 10 to 15 meters)
– Skis parallel with distance not more than two ski widths, see art. 431.2.2 (snowplough position is allowed)
– With equal weight on both legs in upright body position skiing safely through the fall line with arms and legs in any relaxed position.

Point Deductions

– Maximum point deduction for the entire group of faults	7.0 pts
– unsteadiness and /or not correct body position throughout the transition curve until passing the fall line	0.5 to 3.0 pts
– passing through the transition curve with both hands back and/or posterior of the body touching the ski/snow/mats. This will also be applied for passing the fall line in this position	4.0 to 5.0 pts
– fall before crossing or on the fall line	7.0 pts

432 The Measuring of Distance

432.1 The Definition of Jumping Distance

The distance to be awarded is measured from the edge of the takeoff to the point where the jumper touches the landing slope. The landing is considered complete when both feet are in full contact with the landing slope. For abnormal landings (one foot landing, e.g. one foot on the snow and the other

remaining in the air noticeably longer than it would take for a normal landing) the distance measured will be the point where the first foot is in full contact with the landing slope.
The landing point is that point, where at this time the feet of the athlete are positioned. If there is a distance between both feet, the middle between the legs is the relevant point.
If the landing does not proceed by placing the skis on the snow (a fall), the distance measured will be the point where any part of the jumper's body first touches the landing slope.

432.2 The Measuring of the Jumping Distance by the Distance Measurers

The distance measurers stand on one side of the landing slope and follow the jumper's trajectory with their eyes up to the landing point. The measurer in whose measuring area the viewed jump landed shall mark the jumping distance to an accuracy of 0.5 m. The mark to be awarded is indicated by the placement of the measurer's hand on the distance markings. Half meters are indicated by an additional raising of the free arm. The distance markings shall be placed on both sides of the landing slope to prevent parallax mistakes by the markers (art. 415.1)

432.3 Technical Distance Measuring

432.3.1 Technical measuring devices that measure distances to an accuracy of 0.5 meter and tabulate the distance are permitted for the recording of the jumping distance and the calculation of distance points.

432.3.2 Distances must also be practically measured by distance measurers as a back-up and in case of mechanical failure of the technical measuring device.

433 The Calculating and Announcing of Results

433.1 Style Points

Scoring starts with the scores of five Jumping Judges, and then the highest and lowest scores are eliminated. The three remaining scores are added. The sum of these scores is the total score for style points for a jump.

433.2 Distance Points

The points scored for the distances jumped are calculated on basis of the table point. The point for one m is based on a points table predicated on the K point of the hill.

K-Point Distance			*Meter Value*
20	to	24 m	..... 4.8 pts./m
25	to	29 m	..... 4.4 pts./m
30	to	34 m	..... 4.0 pts./m
35	to	39 m	..... 3.6 pts./m
40	to	49 m	..... 3.2 pts./m
50	to	59 m	..... 2.8 pts./m
60	to	69 m	..... 2.4 pts./m
70	to	79 m	..... 2.2 pts./m
80	to	99 m	..... 2.0 pts./m

100 m and larger ..... 1.8 pts./m
170 m and larger ..... 1.2 pts./m

The K point of the jumping hill acts as the table point; consequently, the K-point distance equals 60 distance points. After the m value of the hill has been determined, the distance difference of the measured lengths for jumps must be calculated. Distances shorter than the K point are calculated by multiplying the m value by the length difference and subtracting this number from 60; by contrast, distances longer than the K point are calculated by multiplying the m value by the length difference and adding this number to 60.

433.3 The Collective Point Score

This score is calculated by adding style and distance points together.
If the total of the style and distance points results in a negative sum, the minimum score is at least zero (no negative points).

433.4 The Total Point Score

This score is calculated by adding together the collective point scores from the competitive jumping rounds. The jumper with the highest total point score is the winner. When two or more jumpers have identical scores, a tie is declared, and the jumpers are awarded the same place. The following position(s) shall be displaced (eliminated) in accordance with the number of tied places. In the final result list, tie placings shall be listed in reverse order of the jumper's start number (the higher start number at first).

433.5 The Announcement of the Results

An unofficial results list will be posted immediately after the competition. The chief of calculations and the competition secretary examine and compare the unofficial results list with the original recording lists. The competition secretary then presents the final list for approval to the Jury. If the Jury has not received any protests, the results list will be published as the official results after the protest time. The protest time is as a rule 15 minutes after the end of the competition. Team captains' meeting can decide on a shorter protest time. The results list shall include the following details:

– the name of the competition
– the date and place of the competition
– the name of the hill and reference to its K point and Hill Size (HS)
– the name and country of each Jumping Judge
– the name and country of each Jury member
– information on the weather (snow conditions, temperature, wind, etc.).
– the number of entered, started, and qualified competitors

in addition for each listed competitor:

– the place, start number, last and first name, country or club

followed by separate data for each round

– distance jumped, inrun velocity, distance points, style points, collective points per round and at the end of the line total point score for each competitor.

Official results lists must be signed by the TD and the chief of competition. The official results list sent to the FIS must be written in Latin characters.

Additional list of points deductions for flight, landing and out-run, see art. 431.1.

440 Sanctions, Protests, Disciplinary Measures

The following articles 441, 442 and 443 have to be applied on the basis of
art. 223 (sanctions),
art. 224 (procedural guidelines) and
art. 225 (appeals commission)
of the joint regulations for all competitions.

441 Sanctions, Disqualifications

The Jury shall sanction a competitor if he violates the regulations of the ICR or the competition rules or doesn´t follow decisions of the Jury. In particular, if he

441.1 doesn't meet the eligibility requirements of art. 203 (FIS-license);

441.2 enters under or by false data;

441.3 doesn't meet the age-group regulations (art. 406):

441.4 violates the provisions of article:

204 Qualification of Competitors,
205 Competitors Obligations and Rights,
205.6 Support for the competitors,
206 Sponsorship and Advertising,
207 Advertising and Commercial Markings,
215 Entries,
217 Draw,
221 Medical Examinations and Doping
222 Competition Equipment

441.5 The Jury shall disqualify a competitor by any of the following reasons:

441.5.1 Competition Equipment (art. 222)

441.5.2 Training on the jumping hill when it is explicitly closed

441.5.3 Arriving late at the start (art. 422.8 and 422.12)

441.5.4 Violating the decision on the length of the inrun (art. 422.1 and 422.2)

441.5.5 Exceeding the start control time (art. 422.10)

441.5.6 Starting before the hill-clear signal or intentionally delaying readiness to start (art. 422.11).

441.6 Reasons for disqualification after:

article 441.5.1 Competition Equipment
article 441.5.3 (arriving late at the start);

article 441.5.4 (violating the decision on the length of the inrun or using non authorized start help);
article 441.5.5 (exceeding the start control time) or
article 441.5.6 (starting before the hill-clear signal or intentionally delaying readiness to start).

This refers only to the affected jump during the current round. The jumper will keep an overall standing of zero points for that round.

If more rounds follow, the respective jumper can take part to these rounds, if according to the competition mode, the result or the ranking (with this jump's points = 0) allow him to participate at the next rounds.

442 Protests

442.1 Protests against the entry of a competitor must be delivered in writing to the competition secretary before the start of the competition.

442.2 Protests against the actions made by another competitor or an official during the competition must be made in writing to the competition secretary within 15 minutes after the completion of the competition.

442.2.1 At the OWG and WSC, a verbal protest must be submitted to any Jury Member within five (5) minutes.

442.3 Protests concerning incorrect calculations or result misprints shall be considered if sent by registered mail from the competitor's National Ski Association to the event organising association within one month of the date of the competition. If a mistake is proven, the correct results shall be republished and the awards redistributed if necessary.

442.4 The Jury must consider protests if they are made within the allowable time limit and a sum of CHF 100.– has been deposited with the competition secretary.

442.5 Distances measured manually by distance measurers and style scorings of jumping judges are subjective decisions (so called “statements of facts”) on real facts which are not repeatable and therefore, cannot be corrected. Therefore, protests against such subjective decisions aiming at a correction of the result are not allowed. This to include, protests concerning the start control procedure for Ski Jumping in situations of variable wind conditions.

443 Disciplinary Measures

443.1 The Jumping Committee can take the following disciplinary measures against a TD or Jumping Judge who has made irregular or unfair decisions or judgements and has personally misbehaved:

– a written reprimand
– a temporary retraction of the license.

Applications for disciplinary action must be made in writing to the Sub-Committee for Officials, Rules and Control, which will hear the statement of the accused official and then submit a proposal for decision to the Jumping Committee.

443.2 The Jury may take disciplinary measures against a distance measurer who intentionally executes false or improper measurements and has personally misbehaved. The following can be done only if the Jury has been advised by the chief distance measurer to do so:

- an oral reprimand
- a written notification
- temporary exclusion from duties as a distance measurer.

443.3 If a team captain or trainer in a competition infringes the ICR Rules, decisions of the FIS Ski Jumping Committee, of the Jury or if he behaves in an unsporting manner, the Jury may impose a sanction.

3rd Section

Regulations for the Administration of Specific Types of Competitions

450 Types of Ski Jumping Competitions

The following types of Ski Jumping competitions may be held:

- international championships on normal and large hills
- international competitions on one hill (normal or large hill)
- team competitions
- Ski Flying competitions.

451 International Championships on Normal and Large Hills

451.1 OWG and WSC jumping competitions shall be held on hills of two different sizes. A World or Olympic champion will be selected for each hill size. The smaller hill should have a Hill Size (HS) of at least 100. The difference between the hill sizes must be at least 25 m.

451.2 To guarantee an equal opportunity, both jumping hills are to be closed for training and competition 14 days before the first training day of the OWG respectively WSC.
The competition on the normal jumping hill should take place first. The competition dates have to be scheduled in such a way that all three training days/sessions, according to article 424.1 which are also required for the second jumping competition, could only be used after the competition on the first jumping hill.

451.3 For OWG and WSC, FIS general regulations limit entries from each participating National Ski Association to four competitors in each event and a maximum number of six athletes may take part in the official training; different competitors may be used in the different events.

451.4 For OWG and WSC, individual competitions will be held on both jumping hills consisting of two scored rounds of jumps each and a maximum number of 50 participants.
All jumpers (max. four per NSA, see art. 451.3) must qualify for participation in an individual competition. For this purpose, on the last training day a trial round and a qualification round will be held, on which only the maximum number of four per nation is allowed to be entered.
A jumper, who has reached 95% of the maximum compensated distance by the jumpers who have to qualify but has a fall, has the right to participate in the competition in addition to the qualified jumpers.
One trial jump (round) must be included in the competition program. The decision to use the trial jump is up to the jumper.

451.5 For the starting order for the trainings, qualifications, trials and the first scored rounds, the competitors will be divided into two groups.

– group I for jumpers without WCJ points and
– group II for jumpers with WCJ points.

The starting order within the groups will be determined as follows:

– group I through draw and
– group II in reverse order of the actual WCJ standings.

For the second scored round the starting order is in reverse order of the collective points score from the first scored round.
For the second scored round only the top 30 of the first scored round participate.

451.6 For OWG and WSC, if only one official competitive round of jumps is held and the competition is postponed because of poor weather conditions, the second official competitive round shall be held as soon as weather conditions permit. In such a case, a trial round should precede the second official competitive round. In exceptional cases, where the second official competitive round cannot take place during OWG or WSC, the collective scores from the first competitive round shall be used as the final result. Declaring the trial round of jumps as the first competitive round after this situation has occurred is not permitted.

452 International Competitions on One Hill (Normal or Large Hill)

452.1 Entries, Groupings, the Draw, and Starting Order

452.1.1 A list of competitor entries from each participating National Ski Association must be presented to the race office at least 2 hours before the draw. The list of entry has to contain the following:
Family Name/First Name/Club/Year of birth/Seeded Group.
In exceptional cases the Jury may shorten this time period.

452.1.2 As a rule, competitors will be divided into four groups. Each team may enter one competitor in each group. The number sequence of the groups is IV (best jumpers), III, II, and I (poorest jumpers). This procedure is to be repeated if teams are entering more than four competitors per event.

452.1.3 If a team wishes to enter more than eight competitors, it is necessary to decide at the team captains meeting which group additional competitors will be placed in. In this case, it is possible to form an additional group of competitors, group I-A.

452.1.4 If a team is entering fewer than four competitors, the team leader may choose which group(s) these competitors will be seeded in. However, the team leader may enter only one competitor per Seeded Group.

452.1.5 For competitions with fewer than 40 competitors, the number of Seeded Groups will be decided at the team captains meeting.

452.1.6 For World Cup, Continental Cup and FIS Cup competitions, specific regulations concerning the number of participants per National Ski Association, the Seeded Group resp. for the general mode of execution (e.g. K.O-modus) may be issued.

452.1.7 For the draw of the start order, each Seeded Group will be done separately.

452.1.8 As a rule, the starting order is based on the same sequence as the Seeded Groups, that is, groups I, II, III, and IV. In special situations or conditions, the team captains may decide that a different starting sequence of the groups should occur.

452.1.9 The start order of the second competitive round may be the reverse of the order of the collective scores from the first competitive round. In addition, it is possible to limit the number of competitors allowed to jump.

452.1.10 The start order procedures and the field size (number of competitors) must be announced in the invitation or the Cup competition regulations sent to the participating National Ski Associations.

452.1.11 If announcements concerning art. 452.1.9 were not received by the participating National Ski Associations, it must be decided at the team captains meeting whether to carry out the competition according to art. 452.1.9.

452.2 The Number of Jumps

452.2.1 At all international Ski Jumping competitions, two official competitive rounds shall be held. The competition program must also include one trial round. The decision to participate in the trial round is up to the jumper.

452.2.2 In exceptionally poor weather situations where the second official competitive round cannot take place, the collective scores from the first competitive round shall be used as the final result. In the exception on grounds of unfavourable weather conditions or other unusual circumstances the trial can be cancelled, when on one of the previous days, at least one complete training round has been made. Such a decision must be taken by the Jury before the competition starts. Declaring the trial round of jumps as the first competitive round after this situation has occurred is not permitted.

452.3 Summer Competitions on Plastic Mats

Between 15th June and 15th October (15th November to 15th March in the southern hemisphere), FIS-sanctioned jumping competitions may take place on plastic hills. These competitions must be registered in the FIS Calendar. During these types of competitions, ICR Rules are in effect.

453 Team Competitions for Ski Jumping

453.1 For a team competition, each team will be made up of four competitors.

453.2 Results are calculated as stated in art. 433 and by addition of the collective points of the four jumpers of the team. Individual competitions cannot occur

simultaneously with a team competition. Team competitions cannot be scored as individual competitions.

453.3 The start order of the competitors shall be decided at the previous team captains' meeting.

453.4 For both the trial round and the two official competitive jumps, there are four groups, with one jumper from each team entered per group. The sequential numbers of each member of a group are determined by a specific colour:

- Group I red start numbers
- Group II green start numbers
- Group III yellow start numbers
- Group IV blue start numbers.

Within a group, the sequence of the start order of the team (nation) member is as selected in the draw. Each team decides the order in which its jumpers will start. The competitors must remain in the same group as well in trial round and in both competitive jumps. Immediately after the draw of the team order, a list of the starting order of the jumpers within the team must be submitted to the Competition Committee.

453.5 If the conditions so demand, the length of the inrun can be changed after each group, or a round of only one specific group can be cancelled and restarted.

453.6 The start order will be based on reverse order of the actual World Cup standing. By equal point standings will the start order be made by draw in team captains' meeting between the equal placed teams. Teams without World Cup points start in the beginning of the competition. The start order must be made by draw.

454 Ski Flying Competitions

454.1 The Organisation of Ski Flying Competitions

The FIS Council shall authorise the hosting of all sanctioned Ski Flying competitions. The owners of all Ski Flying hills must agree not to use the facility without FIS consent and sanctioning.

454.2 Entries

Competitors in Ski Flying competitions can be entered only by their own National Ski Association. The national association has full responsibility for competitors' actions.

454.3 Forejumpers/Test Ski Flying

The organiser is responsible for the arrangement of twelve qualified forejumpers on each day. These jumpers may not be part of the official competition but must be entered by their National Ski Association acc. IWO Art. 215. All of them must be capable to start from the starting point established by the Jury for the competition round. All forejumpers have to be at least 18 years old.

Test Ski Flying has to be organised under control of the Jury. The same rules as for the competition apply including equipment control.

454.4 The Number of Days and Jumps

Ski Flying events will take place during four days. If any of the rounds have to be cancelled and repeated, no more than four competition flights per day and jumper are allowed.

454.4.1 Ski Flying World Cup

The WCJ rules will be applied without restriction regarding participation right, starting order for training, qualification and competition as well as the carrying out as such.

454.4.2 Ski Flying World Championship (SFWC)

454.4.2.1 On the first day of the event the official training and the qualification round takes place. The second and third day are competition days for the individual event and consist of a trial jump and two competition rounds each. The total score as the sum of all collective point scores of the competition rounds are counted for the World Championship. The fourth day will be conducted as a team event.

454.4.2.2 Each nation may enter up to six competitors, all of who may jump in the training session. At the qualification round, only the maximum number of four athletes per nation is allowed to be entered. The qualification round reduces the number of participants to 40 for the first competition round.
The starting order for training, qualification, trial and competition rounds as well as the modus as such is the same as for individual competitions at World Cups in Ski Flying with the following modification for the second competition day of the individual event: at the trial and competition rounds only the best 30 of the previous day are allowed to take part (see art. 451.4 and 451.5)

454.4.2.3 If only one competition round is held on a competition day due to unfavourable conditions or if the competition is postponed and if the regulation according to art. 454.4 is kept, the number of competition rounds which were carried out counts for the result. As a consequence the result of the World Ski Flying Championships can consist of only one competition round.

454.4.3 Scoring valuation of the Ski Flying

At Ski Flying events the K-point distance as calculation point equals 120 distance points and the meter value is 1,2 pts./m.