SPECIFICATIONS FOR ALPINE COMPETITION EQUIPMENT

EDITION 2026/2027 (November 2026)

INTERNATIONAL
SKI AND SNOWBOARD
FEDERATION

INTERNATIONAL SKI AND SNOWBOARD FEDERATION

Blochstrasse 2; CH- 3653 Oberhofen / Thunersee; Switzerland
Telephone: +41 (33) 244 61 61
E-mail: alpine@fisski.com
Website: www.fis-ski.com

© Copyright: International Ski Federation FIS, Oberhofen, Switzerland, 2026.
No part of this book may be reproduced in any form or by any means without the written permission of the International Ski Federation

Printed in Switzerland

Oberhofen, November 2026

Table of Contents

Specifications for Competition Ski Equipment 5
A. Definition 5
1. Competition equipment 5
1.1 Effective Manufacturer 5
1.2 Manufacturer's Identification 5
1.3 Competition implements 6
1.4 Additional equipment (accessories) 6
1.5 Auxiliary equipment 6
2. Procedures for the Acceptance of New Developments in Competition Equipment 6
2.1. Eligible applicants 6
2.2 Items for application 6
2.3. Prototype, samples 7
2.4. Decisions of the Committee for Competition Equipment 7
2.5. Proposals to the FIS Council 8
B. Alpine Competition Equipment 9
1 Specifications of alpine competition equipment features 9
1.1 Functional Ski System (Ski, Interfaces, Release Bindings) 9
1.1.1 Assembled unit 9
1.1.2 Component A: Alpine racing skis 10
1.1.3 Component B: Interfaces (e.g. Plates, Lifters) 11
1.1.4 Component C: Release Bindings 12
1.1.5 Component D: Retention Device 12
1.2 Ski boots 12
1.2.1 Thickness of ski boot soles 12
1.2.2 Overall height of the ski boot 12
1.3 Ski poles 12
1.4 Competition suits 13
1.5 Protectors 13
1.5.1 Back protectors 13
1.5.2 Protector with airbag technology 13
1.5.3 Cut resistant undergarment 13
1.6 Crash helmets 13

2 Tolerances for measurements of alpine competition equipment 14
2.1 Functional ski system/Ski boots/ Protectors 14
2.1.1 Tolerance values 14
2.1.2 Procedure in case of negative primary result 14
2.2 Competition suits 14
2.2.1 Tolerance values 14
2.2.2 Procedure in case of negative primary result 15
3 Detailed description of alpine competition equipment 15
3.1 Functional Ski System (Ski, Interfaces, Release Bindings) 15
3.1.0 Definition 15
3.1.1 Assembled unit 15
3.1.2 Component A: Alpine racing skis 16
3.1.3 Component B: Interfaces (e.g. Plates, Lifters) 24
3.1.4 Component C: Release Bindings 24
3.1.5 Component D: Retention Device 25
3.2 Ski boots 25
3.2.1 Definition 25
3.2.2 Geometric features 25
3.3 Ski poles 27
3.4 Competition suits 27
3.5 Protectors 29
3.5.1 Back protectors 29
3.5.2 Protector with airbag technology 30
3.5.3 Cut resistant undergarment 31
3.5.4 Shin Pads 33
3.6 Crash helmets (Racing helmets) 33
3.6.1 General Principles 33
3.6.2 Safety standards 33
3.6.3 General reminders 34
3.6.4 Alteration/modification/additional element 35
3.6.5 Helmets rules for Masters 35
3.7 Ski goggles 35
3.8 Ski gloves 35

Specifications for Competition Ski Equipment

A. Definition

General Principles

The FIS Council shall be the sole authority for determine whether the use of a name, designation, trademark, logo or any other distinguishing sign complies with the FIS Rules and Guidelines; and

The FIS reserves the right to further interpret and/or supplement these Rules and Guidelines in order to help ensure that their spirit and purpose are respected.

1. Competition equipment

The term „competition equipment“ implies all items of equipment used by athletes in competitive skiing, including clothing and implements that serve a technical function. The entire competition equipment forms a functional unit. In this connection the following points must be observed:

a) the principle of safety

b) the principle of fairness

1.1 Effective Manufacturer

“Effective Manufacturer” means the enterprise which itself manufactures the Competition Equipment and/or effectively controls and manages the manufacturing of the Competition Equipment under its own responsibility through customary subcontracting processes, and whose Competition Equipment is effectively offered on the market to end users. If requested by FIS, the manufacturer shall provide documentary evidence of such commercial activities at retail level (such as manufacturing activity in the market of the relevant Competition Equipment, including control over the manufacturing process, retail activity and marketing expenditures linking the brand to the relevant piece of equipment) as a condition for the commercial markings to be accepted as a Manufacturer’s Identification as further defined in these Specifications.

1.2 Manufacturer’s Identification

“Manufacturer’s Identification” means the trade name, brand, logo, or other designation of the Effective Manufacturer under which the particular Competition Equipment is manufactured and commercially offered to the market.

The Manufacturer’s Identification must be a sports equipment brand, which means that the Manufacturer’s Identification is principally used for Competition Equipment and is (i) not principally used for non-sports equipment, and/or (ii) cannot be confused with a similar or identical article used in another line of business, unrelated to Competition Equipment.

1.3 Competition implements

Competition implements refer to equipment which fulfil essential functions during the competition, but which can be separated from the actual competition.
Examples: skis, bindings, boots, poles, clothing, protectors, helmets, ski goggles.

1.4 Additional equipment (accessories)

Additional competition equipment (accessories) are those components or implements which exert an influence on the technical function of the competition equipment and which are attached directly to the equipment by means of recognised fastenings. Such accessories do not perform essential functions during the competition.
Example: parablacks, plastic tip covers, additional weights, protectors, cut resistant undergarment.

1.5 Auxiliary equipment

Auxiliary equipment refers to those components of the competition equipment which do not fulfil an essential function, and which do not fall under the heading of additional equipment
Example: measuring instruments.

2. Procedures for the Acceptance of New Developments in Competition Equipment

Article 222.4 of the ICR reads as follows:
New developments must be submitted by May 1st at the latest, for the following season. During the first-year new developments can only be approved provisionally for the following season and must be finally confirmed prior to the subsequent competition season

2.1. Eligible applicants

a) Manufactures or distributors of the innovation
b) National Ski Associations
c) Members of the Committee for Competition Equipment
The FIS Technical representative from each FIS Committee is eligible to submit applications only for new developments to the Committee for Competition Equipment. Manufacturers, distributors and National Ski Associations have to submit their applications to the respective FIS Technical Committee in advance to be decided whether the item is a new development or a further development of an existing product.

2.2 Items for application

Any significant new developments which are to be used as equipment in competitive skiing may be submitted for acceptance. It is solely the responsibility of the Committee for Competition Equipment to decide whether a new development conforms to the FIS „Competition Equipment Specifications“ taking into consideration the medical, legal and safety

standpoints. The Committee can at any time, however, arrange the removal of an application with regard to items of equipment to be used in competition sport, in accordance with the decisions of these guidelines.

2.3. Prototype, samples

The application must include a detailed description of the innovation. A prototype or sample must be submitted with the application. Relevant reports by scientific experts, as well as reports of experiences made by trainers or participants are to be submitted.

2.4. Decisions of the Committee for Competition Equipment

The Committee for Competition Equipment deals with these applications at its next meeting. If the Committee is of the opinion that the item being presented conforms fully to the valid Specifications for Competition Equipment, this decision will be recorded in a relevant decision.
If the Committee reaches the conclusion that the innovation could be accepted in accordance with the relevant principles and decisions of the FIS Specifications for Competition Equipment in competition sports, the innovation can be provisionally approved for testing for the duration of the following season.
This approval can, however, also be conditionally accepted. On the grounds of fairness, exceptions can be made for certain competitions (Olympic Winter Games, World Championships, etc.).
However, the Committee for Competition Equipment can also take the following measures before provisional approval. These can be dealt with individually or together:

a) requesting further information from the FIS Technical Committees, such as reports by experts and technical data

b) seeking reactions from the FIS Technical Committees. These opinions must be submitted in writing and take the following factors into consideration:
    1. explanation with regard to the usefulness and necessity of the new developments
    2. opinions with regard to the safety of the new developments
    3. assurance that in accepting the new developments, the principle of fairness will be guaranteed

c) soliciting reports by experts and further information through the Committee for Competition Equipment itself.

Should the new developments not conform to the principles of the FIS Specifications for Competition Equipment, either through the application itself, or during the course of the procedures, the use of the new developments in question will be banned in competition sport. This will also occur if, during the item’s probation period, circumstances results which lead the Committee to decide that the new developments do not conform to the principles of the FIS Specifications for Competition Equipment. In such a case, the provisional approval will be rescinded, with immediate effect.

2.5. Proposals to the FIS Council

Changes in the Specifications for Competition Equipment can be proposed to the FIS Council only after the approval of the Committee for Competition Equipment - either by means of an initiative from the Committee itself or through an application of one of the National Ski Associations or Technical Committees to the Committee for Competition Equipment.

B. Alpine Competition Equipment

Downhill, Super G, Giant Slalom, Slalom, Parallel
Measurements are valid only if they have been carried out by official FIS equipment controllers, complying with the course of action under the condition the field of play described in the subsequent section.
Measurements are valid at the time of measurement, irrespective of previous measurements.

1 Specifications of alpine competition equipment features

1.1 Functional Ski System (Ski, Interfaces, Release Bindings)

1.1.1 Assembled unit

Parameter	Value
Bearing surface height h_{BS} (mm) (±)	50_{Max}

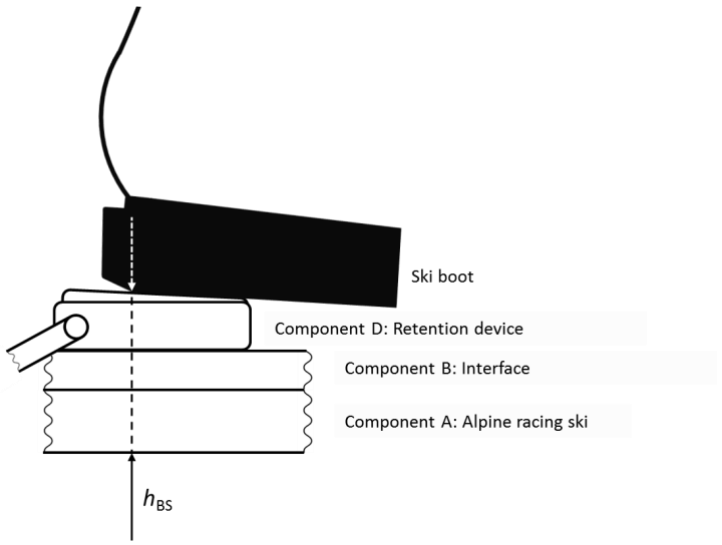

1.1.2 Component A: Alpine racing skis

Parameter	Event	OWG/WSC/WC/ WJC/COC (Level 0-1)	FIS/YOG/NC/E NL (Level 2-3-4)	U14	U16	Masters**
Ski length l_N (cm) (±) ****	DH Women	210Min 218Max	205Min 218Max			
	DH Men	218Min 223Max	213Min 223Max			
	SG Women	205Min 215Max	200Min 215Max		183Min	180Min ***
	SG Men	210Min 218Max	205Min 218Max		183Min	185Min ***
	GS Women	188Min 192Max	183Min 192Max	188Max	188Max	175Min
	GS Men	193Min 200Max	188Min 200Max	188Max	188Max	180Min
	SL Women	155Min	155Min	130Min	130Min	
	SL Men	165Min	165Min *	130Min	130Min	
	* 155cm Men U18 (first year) at FIS] ** No length restriction for Women above 55 and Men above 65 years of age *** GS Skis permitted. Minimum ski length for SG skis is compulsory					
Radius R (m) (±) ****	DH Women	50Min	50Min			
	DH Men	50Min	50Min			
	SG Women	40Min	40Min		30Min	
	SG Men	45Min	45Min		30Min	
	GS Women	30Min	30Min	17Min	17Min	
	GS Men	30Min	30Min	17Min	17Min	
	SL Women					
	SL Men					
Ski weight (kg) For the system ski+plate+ binding	DH Women	5.2 Max	5.2 Max *			
	DH Men	5.3 Max	5.3 Max *			
	SG Women	5.0 Max	5.0 Max *			
	SG Men	5.1 Max	5.1 Max *			
	GS Women	4.9 Max	4.9 Max			
	GS Men	5.1 Max	5.1 Max			
	SL Women	4.5 Max	4.5 Max			
	SL Men	4.6 Max	4.6 Max			
			* Tolerance of 300g season 2026/2027			
Width of the waist of the ski b_M (mm) (±) ****	DH Women	65Max	65Max			
	DH Men	65Max	65Max			
	SG Women	65Max	65Max	65Max	65Max	
	SG Men	65Max	65Max	65Max	65Max	
	GS Women	65Max	65Max	65Max	65Max	
	GS Men	65Max	65Max	65Max	65Max	
	SL Women	63Min	63Min			
	SL Men	63Min	63Min			
Width of the shoulder of the ski b_V (mm) (±) ****	DH Women	95Max	95Max			
	DH Men	95Max	95Max			
	SG Women	95Max	95Max			
	SG Men	95Max	95Max			
	GS Women	103Max	103Max			
	GS Men	103Max	103Max			
	SL Women					
	SL Men					

Tip height h_S (mm) (±)	DH/SG GS/SL	30_{Min} 50_{Min}	30_{Min} 50_{Min}			
Tail height h_T (mm) (±)		10_{Max}	10_{Max}			

**** Marking on skis is mandatory. Ski length, Radius (except for SL), Width of the waist of the ski and Width of the shoulder of the ski (except for SL) must be marked. Specific standardized FIS Labels intergraded in a non-removable way in the design attesting conformity with the FIS specifications for competition skis should be used. Labels can be used instead or in addition to measurement values. Manufacturers must confirm compliance with the equipment specifications annually.

1.1.2.1 Geometric Features for Masters

For MAS racers the specifications at 1.1.2 above in regard to ski length (except Super G), radius and profile width are recommendations. The minimum ski length for Super G skis is compulsory for MAS racers.
No length, width or ski radius restriction for Women 55 and above and Men 65 and above years of age.

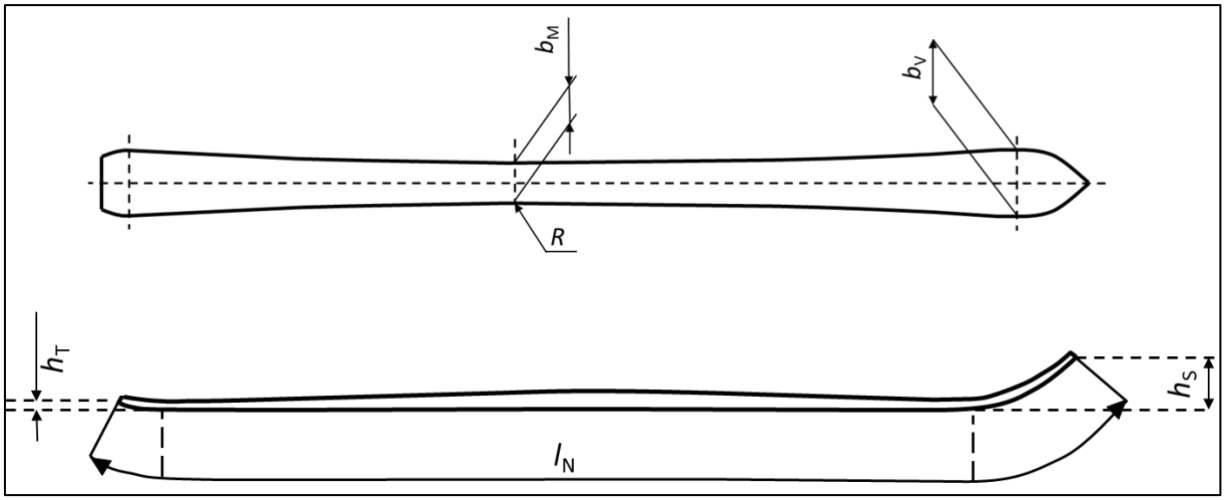

1.1.3 Component B: Interfaces (e.g. Plates, Lifters)

Parameter	Specification
Width	At each point of the interface, its width must not exceed the width of the running surface.

1.1.4 Component C: Release Bindings

See detail description

1.1.5 Component D: Retention Device

See detail description

1.2 Ski boots

1.2.1 Thickness of ski boot soles

Parameter	Category	Value
Thickness of ski boot soles t_B (mm) (±)	Women, Men and U14 & U16 U12 MAS	43_{Max} Should be the same as in the categories U14 and U16 45_{Max} (Recommendation)
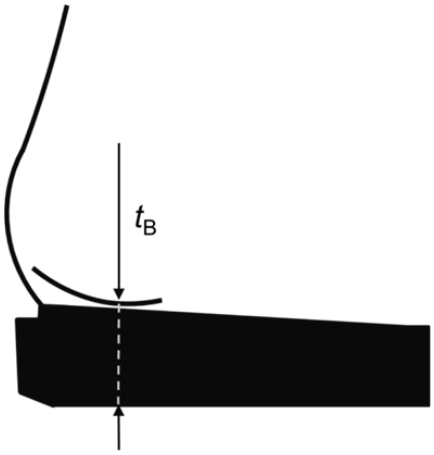		

1.2.2 Overall height of the ski boot

The overall height of the ski boot is set in context of the boot sole length defined by the imprint on the boot. Following maximum values for the maximum boot height (h_B) are defined:

Sole length (mm)	260-269	270-279	280-289	290-299	300-309	310-319	320-329	330-339
Max h_B (mm)	365	369	370	372	383	385	401	434

1.3 Ski poles

Metal baskets are not permitted.

1.4 Competition suits

Parameter	Event	Value
Permeability (±)	DH/SG/GS	30 l/m^2/s
+ Label attesting conformity with FIS specifications for competition suits "CS2015"		
Width of the label		30mm
Height of the label		45mm

1.5 Protectors

1.5.1 Back protectors

Parameter	Value
Thickness of back protector (mm) (±)	45$_{Max}$

1.5.2 Protector with airbag technology

Parameter	Value
Thickness of protector with airbag technology (mm) (±)	55$_{Max}$

1.5.3 Cut resistant undergarment

Parameter	Value
Uncut length (mm)	200$_{Min}$
Cutting force 1 star level (N)	100
Cutting force 2 star level (N)	200
Cutting force 3 star level (N)	300
Cutting force 4 star level (N)	400
Cutting force 5 star level (N)	500

1.6 Crash helmets

Event	Safety Standards
DH/SG/GS/PAR	ASTM 2040 EN 1077 (class A) EN 1077 (class A) at test speed of 6.8m/s
+ Label attesting conformity with FIS specifications for racing helmets "RH 2013"	
Width of the label	10mm
Height of the label	15mm
SL	Minimum standards: ASTM 2040 EN 1077 (class B)

2 Tolerances for measurements of alpine competition equipment

2.1 Functional ski system/Ski boots/ Protectors

2.1.1 Tolerance values

Parameter	Tolerance Value
Bearing surface height (h_{BS})	0.1mm
Ski length (l_N)	10mm
Ski weight	50g *300g for DH and SG (Level 2-3-4) for season 2026/27
Radius (R)	1,5% + 1m preparation tolerance for DH skis
Width of the waist of the ski (b_M)	0.1mm
Width of the shoulder of the ski (b_V)	0.1mm
Tip height (h_S)	2mm
Tail height (h_T)	2mm
Thickness of ski boot soles (t_B)	0.5mm
Overall height of the ski boot (h_B)	5mm
Thickness of back protector	1mm
Thickness of protector with airbag technology	1mm

2.1.2 Procedure in case of negative primary result

Report from the Jury designated controller to the Jury. Temporary confiscation of the equipment. Measurements to be repeated three times (3 x) in the presence of the Jury and if desired, the Athlete concerned and/or maximum two representative(s) named by her/him. All three (3) measurement values are to be minuted according to requirements. Generation of an arithmetical average from the three (3) measurements. Declaration of the calculated value according to the protocoled values (Truncation/Rounding according to ISO 80000-1-> if the figure to be omitted at the first decimal place is a 0,1,2,3 or 4, then round down otherwise round up). The Tolerance will be subsequently added to the calculated value. This value will then be compared with the Specification.

2.2 Competition suits

2.2.1 Tolerance values

Parameter	Tolerance Value
Permeability	3.0 l/m^2/s

2.2.2 Procedure in case of negative primary result

If one measurement is less than 30 litres per m2/sec the following procedure will be carried out:

- The competition suit will be re-tested at six different randomly selected spots
- The two extreme values (highest and lowest) will not be taken into consideration
- The average value of the four valid measurements is built. The result is served with 0.1 l/m2/s Graduation
- Thereafter a tolerance of 3 l/m2/s is added. This serves the final value of the measurement
- The final value of the measurement will be compared against the specification.

3 Detailed description of alpine competition equipment

3.1 Functional Ski System (Ski, Interfaces, Release Bindings)

3.1.0 Definition

Functional Ski System is the assembled unit of the single components: (A) ski, (B) interfaces, (C) release bindings and (D) retention device.

3.1.1 Assembled unit

3.1.1.1 Definition

The assembled unit contains the ski, interfaces, release binding and a retention device.

3.1.1.2 Geometric Features

3.1.1.2.1 Bearing surface height (h_{BS})

Definition:	Distance between the bottom of the running surface of the ski and the ski boot sole.
Related ISO Norm	
Specification	Tolerances
Description of measurement:	For h_{BS}, the maximum rectangular distance from the running surface of the ski to the contact area between the bearing surface of the ski boot and the bearing surface of Component D has to be considered.

	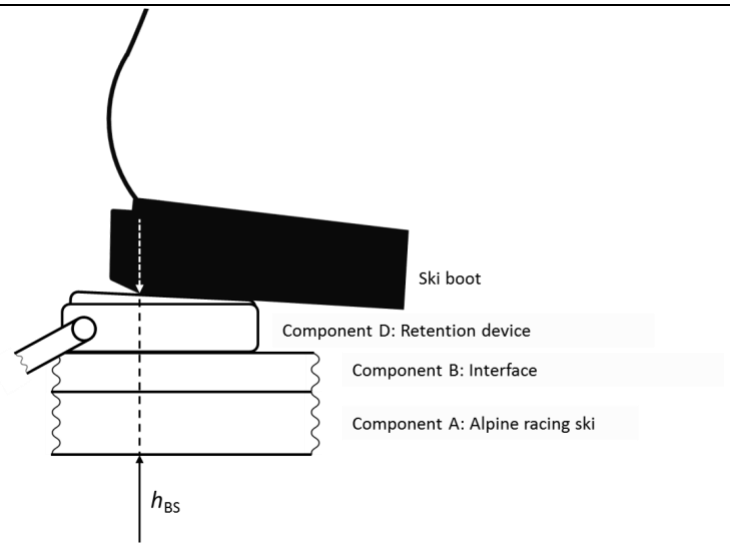	
Measuring device:	Caliper	Accuracy class: DIN 862 Graduation: 0.01mm
Measuring value documentation	e.g. 49.25mm	
Additional Information	Note: The overall standing height of the athlete is the sum of bearing surface height and thickness of the ski boot soles. However, the overall height is not specified, instead the individual specifications for bearing surface height and thickness of the ski boot soles apply.	

3.1.1.2.2 Ski Weight

The system weight is considered as the weight of a fully assembled ski, including the ski, the interface and the binding.

3.1.2 Component A: Alpine racing skis

3.1.2.1 Definition

Skis, predominantly for use in Downhill, Super-G, Giant Slalom and Slalom racing on suitable terrain and utilising the force of gravity. In order to allow transmission of lateral forces, the edges of the running surface of the ski are made mainly of a hard material resistant to wear and tear.

3.1.2.2 Geometric features

3.1.2.2.1 Ski length (nominal length; l_N)

Definition:	The Length of the running surface measured between the ski tail and the ski tip used for the indication of the size of the ski.

Related ISO Norm	ISO 6289	
Specification	Tolerances	
Description of measurement:	Determine the length of the running surface measured between the ski tail and the ski tip (l_N). 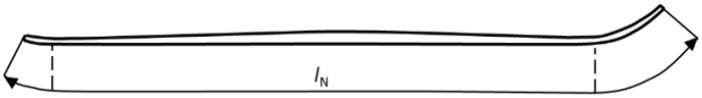 	
Measuring device:	Measuring tape	Accuracy class: EC-CLASS II Graduation: 1mm
Measuring value documentation	e.g. 188.3 cm	
Marking on ski	Mandatory	
Additional Information	Precision for the length of Slalom Skis: When a ski tip different from the main body of the ski is used, the measurement will only be taken into account to the extent it covers a surface corresponding to the natural shape of the ski. ***The manufacturer must mark the tip showing the limit of the natural shape and thereby allow an easy measurement.*** To prevent doubt, specific designs of ski tips as part of the main body of the ski are allowed. Recommendation for children younger than 12 years: Use only one pair of skis in all events if the ski length is shorter than 130 cm.	

3.1.2.2.2 Radius of side cut (*R*)

Definition:	Approximation of the average radius, *R*, allowing global specification of the lateral outline of the ski.
Related ISO Norm	ISO 6289
Specification	Tolerances
Description of measurement:	In principle the procedure is to follow that of ISO 6289 and additionally a specification that is predetermined by the FIS is to be respected. The side cut radius *R* is calculated by using the following formula:

$$R = \frac{l^2_{kR}}{2000(b_{HR} + b_{VR} - 2\,b_M)}$$

where

$l_{kR} = 0.9\,l_1 + 0.8\,l_2$

with

b_M narrowest width of the running surface in the central section of the ski; in millimeters (mm), graduation in 1/100mm; e.g. 64.91mm

l_{kR} distance between the lines b_{HR} and b_{VR}, in mm; e.g. 1656mm

l_1 distance between b_M and the rear end of the ski, in mm; e.g. 880mm

l_2 distance between b_M and the front end of the ski; in mm; e.g. 1070mm

b_{HR} width of the running surface at $0.9l_1$ from b_M, in mm, graduation in 1/100mm; e.g. 80.36mm

b_{VR} width of the running surface at $0.8l_2$ from b_M. in mm; e.g. 88,07mm

R radius of side cut, in metres (m), graduation 1/100m; e.g. 35.17m

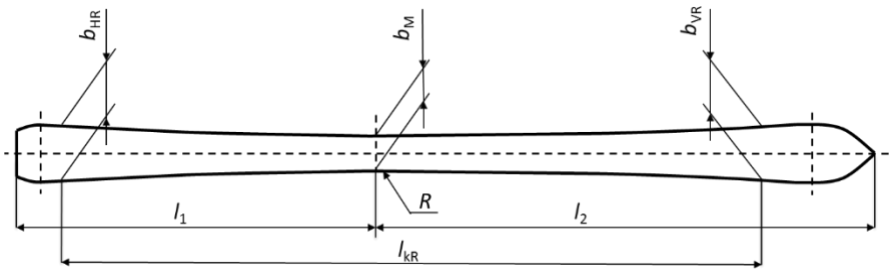

FIS Specification regarding ISO 6289:
As the formula of the existing method of measurement intends to reflect the un-falsified (distortion free) measurement of a radius, this requires that between Point b_{VR} and Point b_{HR} a

	continuously differentiable and monotone curved arch should remain sustained (for example, without a flex point between these two positions). To achieve the requirement stated above the identification of the radius of the side cut must be as follows: • at each point along the distance from b_M to b_{HR} the width must be smaller than at b_{HR} . • at each point along the distance from b_M to b_{VR} the width must be smaller than at b_{VR} . Should one of the criteria set out above not be fulfilled the related ski does not meet the specifications.	
Measuring device:	Measuring tape (length measurements)	Accuracy class: EC-CLASS II Graduation: 1mm
	Caliper (width measurements)	Accuracy class: DIN 862 Graduation: 0.01mm
Measuring value documentation	Input for formula: e.g.: l_{kR} = 1656; b_{VR} = 88.37; b_{HR} = 80.36; b_M = 64.91 Radius of side cut calculated via formula: e.g.: R = 35.23 Truncation/Rounding according to ISO 80000-1; see art. 2.1.2	
Marking on ski	Mandatory	

3.1.2.2.3 Width of the waist of the ski (b_M)

Definition:	Narrowest width of the running surface in the central section of the ski.	
Related ISO Norm	ISO 6289	
Specification	Tolerances	
Description of measurement:	Determine the narrowest width of the running surface in the central section of the ski (b_M) 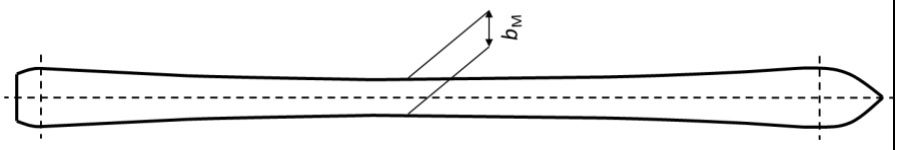	
Measuring device:	Caliper	Accuracy class: DIN 862 Graduation: 0.01mm
Marking on ski	Mandatory	

3.1.2.2.4 Width of the shoulder of the ski (b_V)

Definition:	Maximum width of the running surface in the forward section of the ski (Ski shovel section).
Related ISO Norm	ISO 6289

Specification	Tolerances	
Description of measurement:	Determine the maximum width of the shovel section of the ski (b_V) 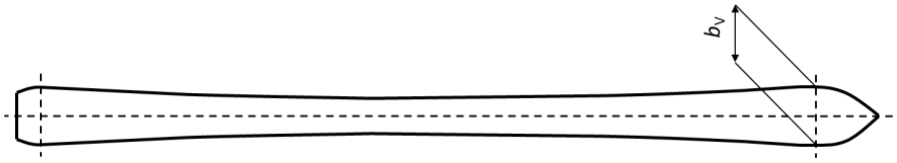	
Measuring device:	Caliper	Accuracy class: DIN 862 Graduation: 0.01mm
Measuring value documentation	e.g. 101.82mm	
Marking on ski	Mandatory	

3.1.2.2.5 Tip height *(h_S)*

Definition:	Height of the underside of the tip measured from a planar surface with the ski body pressed against the surface.
Related ISO Norm	ISO 6289
Specification	Tolerances
Description of measurement:	Determine the height of the underside of the tip measured from a planar surface with the ski body pressed against the surface (h_S).  To simplify the measurement in the field, the flat surface is generated by pressing both skis together. Then following the Norm the distance between the two tips can be determined and the value then divided by two (2). This value then represents the height of the ski tip. Measurement of standard ski tips:  Measurement of special ski tips: The reference point is the factory marking that is required on special constructions. All parts positioned ahead of this reference point must also meet the specifications.

	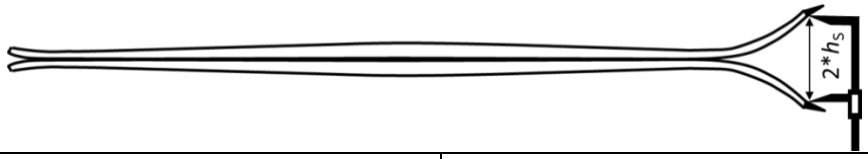	
Measuring device	Caliper	Accuracy class: DIN 862 Graduation: 0.01mm
Measuring value documentation	e.g. 52.23mm → 52mm Truncation/Rounding according to ISO 80000-1; see art. 2.1.2	
Marking on ski		

3.1.2.2.6 Tail height (h_T)

Definition:	Height of the underside of the tail measured from a planar surface with the ski body pressed against the surface (h_T)	
Related ISO Norm	ISO 6289	
Specification	Tolerances	
Description of measurement:	Determine the height of the underside of the tail measured from a planar surface with the ski body pressed against the surface. 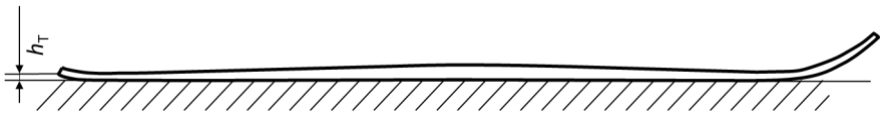 To simplify the measurement in the field, the flat surface is generated by pressing both skis together. Then following the Norm the distance between the two tails can be determined and the value then divided by two (2). This value then represents the height of the ski tail. 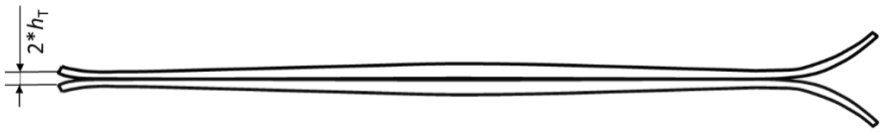	
Measuring device:	Caliper	Accuracy class: DIN 862 Graduation: 0.01mm
Measuring value documentation	e.g.15.36mm → 15mm Truncation/Rounding according to ISO 80000-1; see art. 2.1.2	
Marking on ski		

Labels “World Cup” attesting conformity with FIS Specifications for Alpine Competition skis, OWG/WSC/WC/WJC/COC. (Level 0-1)

















Labels “FIS” attesting conformity with FIS Specifications for Alpine Competition skis, FIS/YOG/NC. (Level 2-3-4)











Width: **20mm** Height: **30mm**

Label attesting conformity for level 0-1 is also valid for level 2-3-4

Overall height of sectional view

No limitations.

3.1.2.2.7 Camber

No limitations.

3.1.2.2.8 Running surface

No limitations

3.1.2.2.9 Running Groove

No limitations

3.1.2.3 Flexibility

No limitations with regard to the rigidity in all grades of flex.

3.1.2.4 Mass

No limitation with regard to weight and distribution of mass.

3.1.2.5 Construction

3.1.2.5.1 Type

No limitation with regard to composite structure.

3.1.2.5.2 Ski components

- Running surface: no limitations with regard to material and dimensions.
- Torsion box: no limitations with regard to material and dimensions.
- Edges: no limitations with regard to material and dimensions.
- Top surface: no limitations with regard to material and dimensions.
- Core: no limitations with regard to material and dimensions.

3.1.2.6 Durability

With regard to the mounting of bindings, the ISO 8364 must be observed.

3.1.2.7 Additional equipment

3.1.2.7.1 No additional equipment is permitted which

a) makes use of foreign energy (e.g. heaters, chemical energy accumulators, electric batteries, mechanical aids, etc.)
b) causes or intends to cause changes in the outer conditions of the competition to the disadvantage of fellow competitors (e.g. changes to piste or snow)
c) increases the risk to the users or other persons, when used for the purpose for which it was intended.

3.1.3 Component B: Interfaces (e.g. Plates, Lifters)

3.1.3.1 Definition

Functional component, mounted between skis and release bindings.

3.1.3.2 Geometric features

Interfaces can be mounted if the following conditions are taken into consideration:

3.1.3.2.1 Width of the interface

At each point of the interface, its width must not exceed the width of the running surface.

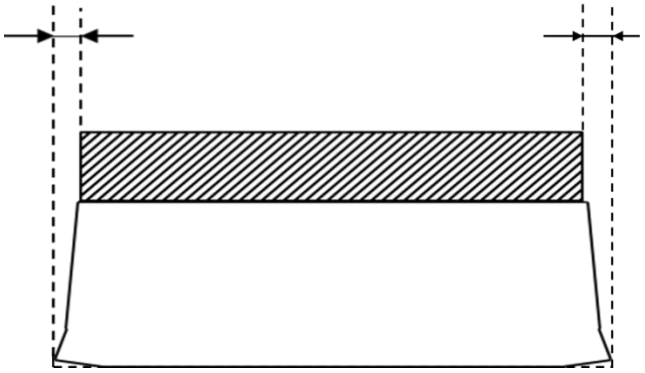

3.1.4 Component C: Release Bindings

3.1.4.1 Definition

Ski binding, which releases the boot from the ski, when during alpine ski racing conditions certain loads reach pre-set values.

3.1.5 Component D: Retention Device

3.1.5.1 Definition

Retention device for alpine skiing is a ski brake which is designed to slow down a ski which has come off after the release of a ski binding. The use of skis without ski brake during competitions or official training runs is prohibited. The functioning of the binding's release mechanism must not be compromised by the method of its mounting.
(See ICR art.222.1).

3.2 Ski boots

3.2.1 Definition

Ski boots are robust footwear developed specifically for skiing, offering protection against jolts and bumps as well as injury from ski edges and other external influences. The ski boot encloses the foot firmly, while at the same time allowing the movement necessary for skiing techniques, in that the ankle has the room it needs to flex, but at the same time facilitating the transfer of every steering movement completely to the ski (according to ISO 5355).

3.2.2 Geometric features

3.2.2.1 Thickness of the ski boot soles (t_B)

Definition:	Distance between the bottom side of the ski boot sole and the base of the heel including all hard and soft parts.
Related ISO Norm	
Specification	Tolerances
Description of measurement:	Determine the thickness of the ski boot soles by measuring the distance between the ski boot sole and the base of the heel including all hard and soft parts (t_B).

	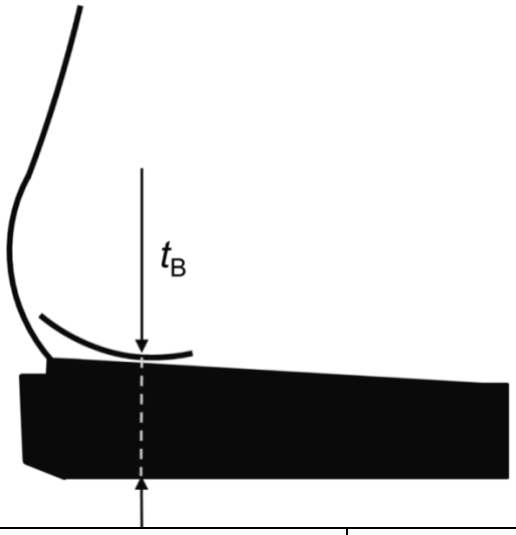	
Measuring device:	FIS measuring device	Accuracy class: DIN 862 Graduation: 0.01mm
Measuring value documentation	e.g. 42.12mm	
Note: Information regarding the measuring device is available on request at FIS!		

Note: The overall standing height of the athlete is the sum of bearing surface height and the height of the ski boot soles. However the overall standing height is not specified as independent parameter, instead the individual specifications for bearing surface height and thickness of the ski boot soles apply.

3.2.2.2 Overall height of the ski boot

Definition		Distance between the bottom side of the ski boot sole and the highest point of the boot when standing on a flat surface, including all hard and soft parts of the boot.
Specification		Tolerances
Description of measurement		Determine the height of the ski boot by measuring distance h_B between the ski boot sole and the highest part of the boot including all hard and soft parts configurated the way it is worn by the athlete.

	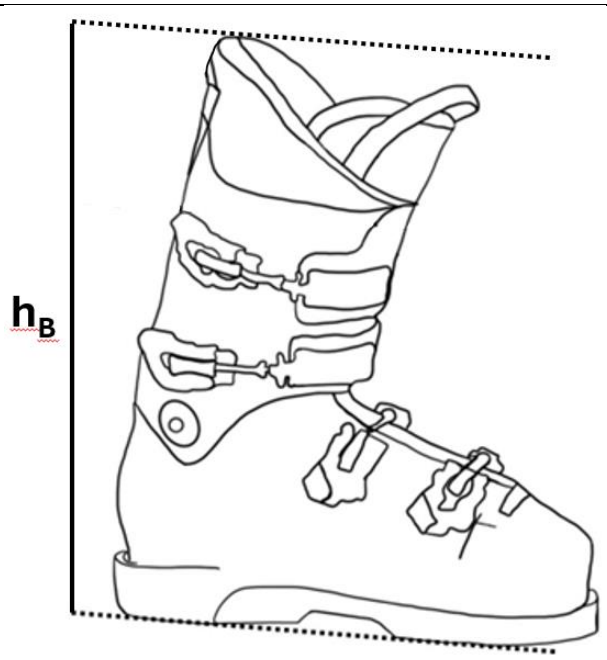
Measuring device	FIS measuring device | Graduation: 1mm
Note: Information regarding the measuring device is available on request at FIS.	

3.3 Ski poles

The ski pole is an item of equipment, the function of which is to aid the skier and facilitate balance. National and international rules establish the minimum requirements for ski pole tips, grips, shafts, baskets, straps, length, etc. Owing to risk of injury, metal baskets are not permitted.

3.4 Competition suits

Specification (see also: FIS ICR art. 606.2)
Measurement tolerance

Competition suits used in DH, SG and GS, and clothing worn underneath, such as undergarments, etc., must have a textile surface on the inside and the outside. The surfaces may not be plasticised or treated by any chemical means (gaseous, liquid or solid) and must have a minimum permeability of 30 litres per m2/sec. Seams may only exist in order to join the portions of the suit. Outer tucks and darts are not allowed. The competition suits must be equally porous in all parts, both from the outside in and from the inside out. Minimum air permeability is established whereby the unstretched fabric must show a medium air permeability of a minimum of 30 litres per m2/sec under 10 mm of water pressure (with a measurement tolerance of 3.0 litres per m2/sec.).

Label attesting conformity with FIS specifications for competition suits (DH/SG/GS):

Fulfilment of requirements is to be attested by a specific standardized conformity label affixed in a non-removable way at the back of the lower left leg above the top of the ski boot cuff area of the competition suit in a location, which is and shall remain visible during competition. The conformity label is shown below. The conformity label shall include the following text: «Conforms to FIS Specifications CS 2015». Labels affixed by manufacturers shall comply with the actual specifications.

The conformity label attests that the manufacturer and NSA are guaranteeing that the surfaces of the competition suit are not plasticised or treated by any chemical means (gaseous, liquid or solid) and that they have a minimum permeability of 30 litres per m2/sec with a measurement tolerance of 3,0 litres per m2/sec.

For level 0 and 1, athletes with competition suits without label will not be permitted to start (ICR art 606.2 & 627.2). Scheduled controls of different materials will still be offered to the NSA's and manufacturers as determined by the FIS Controller. A maximum of 4 test patches per NSA will be permitted per session.

According to the World Cup testing procedures of past seasons, the controllers will determine pre competition testing sessions. The NSA´s will have the opportunity to make a control on their World Cup competition suits prior to the competitions.

This control only gives a confirmation that the material being tested may conform to the FIS Specifications.



.

Width: **30mm**
Height: **45mm**

Label attesting conformity with FIS specifications for Alpine competition suits (GS/SG/DH).

Examination of materials, suits

The guidelines for minimum air permeability established by the Control Procedures/Equipment Working Groups in collaboration with the Federal Institute for Materials Control are valid. Multi-layered materials are accordingly permitted for alpine competition suits and undergarments, as long as they conform to the air permeability requirements in question.

3.5 Protectors

Competitors are allowed to protect all parts of the body with so called protectors in all events:
It remains in the athlete's/NSA's discretion and responsibility to individually decide about the use of protectors.
In Downhill, protectors may not be integrated into the competition suit itself.

In all events these protectors must be worn underneath the conforming competition suit. (Exception forearm protection used in SG, GS and SL and shin protection used in SL)

Protectors must fulfil the 30 litres permeability measurement with a measurement tolerance of 3.0 litres per m2/sec with the exception of the back, shoulder, scapular region, chest, arms and legs. The anatomical body shape may not be changed.

3.5.1 Back protectors

Specification
Measurement tolerance

3.5.1.1 Definition

The back protector is an additional item of equipment, which protects the athlete’s back against weather and external forces.

3.5.1.2 Specifications

The back protector must adapt to the anatomical bend of the athlete’s spine and lie flat against the body. The top edge of the back protector must be situated in the area of the spinal column and may not go above the 7th cervical vertebrae (C7). The maximum thickness must be in the middle part and may not exceed 45 mm; the thickness reduces at the edges of the back protector. Designs with the alter to improve aerodynamic properties are forbidden. The back protector must be worn underneath the competition suit. It is strongly recommended to use protectors that are certified according to the latest EN1621:2 standard.

3.5.1.3 Recommendation for specifications for children

Children under 12 years, U14 and U16 should use back protectors in correct sizing and certified according to the latest EN1621:2 standard.

3.5.2 Protector with airbag technology

Specification
Measurement tolerance

3.5.2.1 Definition

Airbag protector for alpine skiing is an additional piece of protective equipment based on an inflatable aircushion, electronically inflated with the aim to improve the protection level for athletes who are participating in alpine speed competitions.

3.5.2.2 General Specifications

The presence of this device must not limit the freedom of movement for the athletes during competition. The airbag system must only be activated when the algorithm detects a crash situation and is triggered autonomously (without any voluntary intervention).

Protectors with airbag technology must be worn underneath the competition suit, and fulfil the requirements given in art. 3.5 (Protectors).

Annually, manufactures are required to state their compliance of the FIS equipment specifications. Each manufacturer confirms the reliability of the airbag system bears sole responsibility for the function and guarantees the innocuousness of their products in terms of materials and design. A non-removable FIS compliance label affixed to the protector is mandatory. The label certifies compliance with the FIS equipment specifications and the supplier's safety standards (product description).

3.5.2.3 Technical specifications

- Once triggered, the inflation time must not be greater than 200 milliseconds (in the temperature range -20°C to +30°C)
- Once inflated, the airbag cushion should not deflate immediately but remain fully inflated for minimum 3 seconds.
- Once inflated, the airbag cushion shall cover minimum one of the following areas: shoulders, back, or chest.
- For body parts protected by aircushion: To assess the effect of energy absorption in the airbags, a specific test template must be used by the specified test institute. To meet the requirements, the maximum average impact value must be below 18 kN, and at least one of the impact values must be below 6 kN, based on European standard EN1621 protocols.
- The airbag must be designed so that unintentional deployment does not prevent athletes from continuing to ski.
- The maximum thickness of protectors (untriggered) with airbag technology must not exceed 55 mm.
- The airbag must include a back protector based on European Standard EN1621:2.

3.5.2.4 The use of Airbag protector is determined for alpine speed events as follows:

- Airbag system is mandatory for race level 0 and 1.

Fulfilment and compliance with the FIS equipment specifications and the supplier´s safety standards (product description) is to be attested by a conformity label shown below. The non-removable label is to be placed on the outside of the airbag protector, centered at the back, 1 cm below the top edge of the protector. The conformity label shall include the following text: “Conforms to FIS Specifications AIRBAG 2024”. The label must show a minimum size of 20mm x 30mm (width x height) and must be accessible before starting the competition or official training (e.g., elongated label). Athletes not wearing an activated airbag protector during speed competitions and official training for required competitions will not be permitted to start or disqualified (ICR art 627.2).



3.5.3 Cut resistant undergarment

3.5.3.1 Definition

Cut-resistant undergarment are clothing items worn underneath the competition suit, designed to improve the athlete's protection against cut injuries.

3.5.3.2 General Specifications

In order to provide appropriate protection, the cut-resistant undergarment must be sized correctly based on producer’s guidelines and worn in strict compliance with manufacturer instructions of use. The undergarment shall be used without alteration/modification, as certified by the manufacturer. Cut-resistant undergarment is intended to provide supplementary protection and not infinite cut protection.

3.5.3.3 Technical specifications

The cut-resistant undergarment level of protection is defined by the specifications of the FIS-DITF test standard 2021.

Basic definition parameters are:

The minimum uncut measuring length for each level are: 200mm, cut resistance at cutting force of the corresponding level 4 out of 5 tests of the same textile must have the corresponding cut resistance in 3 directions of textile positions: 0° / 45° / 90°. The direction with the lowest cut resistance value defines the FIS star level.

Force (N)	100	200	300	400	500
FIS-star	*	**	***	****	*****

Fulfilment of requirements is to be attested by these standardised conformity labels, affixed on the outer side of the protection garment in a non-removable way. For the pants, the label must be placed at the back of the lower left leg above the top of the ski boot cuff area in the size of 30x50mm. For shirts, the label must be placed on the spine location (center, top of the back) just below the collar in the size of 30x50mm.

“Conforms to FIS Specifications CRG 2021” and depict the achieved FIS-star(s) level.

The conformity label certifies that the manufacturer has obtained the required certifications (FIS-DITF 2021) fulfils the above requirements. To receive the label, the test protocol must be submitted to FIS Athletes Health Unit.



Label attesting conformity with FIS specifications for cut resistant undergarment.

3.5.3.4 Implementation of cut resistant undergarment

The use of cut-resistant undergarment pants is mandatory for all FIS Alpine Skiing events. The mandatory implementation requires a minimum protection level of 3 stars according to the FIS-DITF test standard

everywhere between the iliac crest and the onset of the ski boot. The use of cut resistant shirts or full body suits is strongly recommended.

3.5.4 Shin Pads

No additional rigid parts are allowed to be worn as shin pads inside the boot. To treat medical issues, additional protection pads, as soft padding can be approved by FIS. Those pads must be made of soft material (e.g. gel, foam) and be flexible in all directions. Additionally, they cannot have a preformed, curved shape adapted to the leg and their size must not exceed the height and width of the ski boot tongue.

3.6 Crash helmets (Racing helmets)

Specification

3.6.1 General Principles

The use of crash helmets is compulsory at all FIS alpine ski events.
The crash helmets shall have no spoilers, nor protruding parts.
The crash helmets models shall comply with safety standards set forth below in regard to the specific events.

3.6.2 Safety standards

The crash helmets used in the respective alpine ski events shall satisfy the following safety standards:

3.6.2.1 DH/SG/GS/PAR

Requirements:

- Helmet model to fulfill and to be certified under both ASTM 2040 and EN 1077 (class A)
- In addition Helmet model to pass an additional specific test under EN 1077 test procedure but at higher test speed of 6.8m/s
    - Additional test to be effected through CEN laboratories. The laboratory shall issue a test protocol showing that the tested model passed the EN test requirements at the increased speed.

Label attesting conformity with FIS specifications for racing helmets (DH/SG/GS/PAR):

Fulfilment of requirements is to be attested by a specific standardised conformity label affixed in a non-removable way at the back of the helmet in a location which is and shall remain visible. The label shall in particular not be covered by the goggle strap. The conformity label is shown below. It shall include the following text: «Conform to FIS Specifications RH 2013». Labels affixed by manufacturers shall comply with the specifications set forth in the attachment.

The conformity label attests that the manufacturer has obtained the required certifications (EN 1077 A and ASTM 2040) and obtained a test protocol confirming that the concerned helmet model fulfils the requirements set forth above under 3.6.2.1. Upon request, the certification documentation and test protocol shall be provided to the FIS.



Width: **10 mm**
Height: **15 mm**

Label attesting conformity with FIS specifications for Alpine racing helmets (DH/SG/GS).

3.6.2.2 SL

Requirements:

- Helmet model to be certified under EN 1077 (class B) or ASTM 2040 as minimum standards
  - NB1: soft ear padding is allowed
  - NB2: crash helmets fulfilling higher safety standards can be used a fortiori in SL. This includes:
    - EN 1077 (Class A), SNELL 98 and all helmets fulfilling the GS/SG/DH specific standard described above.

Labels:

Compliance with the above requirements is attested by the corresponding certification label (e.g. CE label) and/or by the conformity label set forth above under 3.6.2.1 (i.e. helmets fulfilling the requirements for GS/SG/DH can be used in SL).

3.6.3 General reminders

It is reminded that the manufacturers remain the only entities liable in regard of product liability in connection with manufactured helmets. It is further reminded that crash helmets must be worn in strict compliance with instructions of use and do not offer an absolute protection against the consequences of accidents.

3.6.4 Alteration/modification/additional element

The helmets shall be used without alteration/modification, as certified by the manufacturer. Furthermore, no additional element/equipment shall be affixed on the surface of the helmet.

3.6.5 Helmets rules for Masters

Helmets rules for Masters In all events, competitors and forerunners are obliged to wear a crash helmet, as per the requirements stipulated in section 3.6 and all sub-sections therein.

3.7 Ski goggles

Ski goggles are devices protecting the eyes against weather and rays with optically correct lenses. Their aim is to guarantee good, contrast-free visibility in all weather conditions. The use of ski goggles is recommended. It is prohibited to reshape the ski goggles in order to obtain aerodynamic advantages.

3.8 Ski gloves

Gloves offer protective covering against weather and external forces. The wearing of gloves is urgently recommended. Reshaping the glove, the application of a plastic coating on the outer surface, or the use of skai (imitation leather) with the aim of attaining more aerodynamic features, are not allowed. The glove must not reach beyond the elbow. Protective padding along the entire length of the glove is permitted. The use of protective guards in the form of shields, which are pulled over the glove, is permitted.

Oberhofen, 19.11.2026